06-046800.0700

HINTON JOSEPH & CATHERINE
HINTON JOSEPH & CATHERINE
8080 CELINA MENDON RD
CELINA, OH 45822

CENTER TWP / CELINA SD

06-20-400-006

LEGAL INFORMATION
MID PT SW SE

RTS: 003-05-20
Acres:2.5000

Property Class: 510
Neighborhood 009065-R150
Map: 12
Block:
Card: 17
Bk: Pg:

	OWNERSHIP	ADDRESS	CITY	STATE	ZIP	DATE	AMOUNT	DEED:CONV#	JS	VALID
1	HINTON JOSEPH &	8080 CELINA MENDON RD	CELINA	OH	45822	10/05/2020	205,000	WDC : 732	☐	■
2	VOGEL ALEXANDER R & JULIE	8080 CELINA MENDON RD	CELINA	OH	45822	10/28/2005	173,600	WDC : A : 907	☐	■
3	BUCK KEITH M & HEATHER D	8080 CELINA MENDON RD	CELINA	OH	45822	02/15/2002	130,000	: A : 0	☐	■

X: ☐ TTO LISTER: JO DATE: 12/02/2004 TIME: 09:21:22 AM ☐ LETTER ☐ LETTER REC'D GIS CODE Minor Sub

STREET/ROAD	TOPOGRAPHY	PU-UTILITIES-PR	NEIGHBORHOOD	INFLUENCE FACTORS	
■ PAVED	■ LEVEL	☐ WATER ☐	☐ IMPROVING	☐ A. NO ROAD	☐ F. RESTRICT
☐ GRAVEL	☐ HIGH	☐ SEWER ☐	☐ STATIC	☐ B. TOPGRHY	☐ G. WOOD LT
☐ DIRT	☐ LOW	☐ GAS ☐	☐ DECLINING	☐ C. Ex Front	☐ H. VACANCY
☐ SIDEWALKS	☐ ROLLING	☐ ELECTRIC ☐	☐ OLD	☐ D. QUANTITY	☐ I. WATER FRONT
☐ CURBS	☐ STANDARD	■ STANDARD	☐ STANDARD	☐ E. SZ/SHAPE	☐ J. OTHER/CDU

PROPERTY LOCATION
8080 CELINA MENDON RD, CELINA

COMMENT
TY2022:Net Gen=$2,774.02, Other Assessment=$2.00

LAND COMPUTATIONS

LAND TYPE	SIZE	M RATE C	INF	M VALUE C
HS:Home Site	AC:1	18150		18,200 0
SM:Small Acreage	AC:1.5	8300		12,500 0
Total Acres: 2.5000			TOTAL	30,700 0

VALUATION SUMMARY

VALUE YEAR		2023	2020	2017	2017				
REASON FOR CHANGE		RAPP	RAPP	RAPP	MISC				
APPRAISED VALUE	LAND	30,700	29,400	26,700	26,700				
	IMPR	235,200	142,200	123,400	117,500				
	TOTAL	265,900	171,600	150,100	144,200				
ASSESSED VALUE	LAND	10,750	10,290	9,350	9,350				
	IMPR	82,320	49,770	43,190	41,130				
	TOTAL	93,070	60,060	52,540	50,480				

OCCUPANCY	EXTERIOR
■ SF ☐ DU ☐ TR	☐ WOOD
☐ CONVERSION	☐ STUCCO
BUILDING TYPE	■ ALM/VYNL
☐ MOBILE HOME	☐ CONC BLK
☐ BI/TR LEVEL	☐ METAL
☐ MOD/MAN	☐ BRICK
☐ _____	☐ STONE

ROOFING	ROOF TYPE
☐ METAL	■ GABLE
☐ SLT/TLE	☐ HIP
■ SHINGLES	☐ GAMBREL
☐ SHAKES	☐ MANSARD
☐ COMPOSITE	☐ FLAT

FLOORS	B	1	2	3	U
CONCRETE	☐	☐	☐	☐	☐
WOOD	☐	☐	☐	☐	☐
TILE/COMPO	☐	■	■	☐	☐
CARPET	☐	■	■	☐	☐

INT. FINISH	B	1	2	3	U
PLASTER/DW	☐	■	■	☐	☐
PANELING	☐	☐	☐	☐	☐
UNFINISHED	☐	☐	☐	☐	☐

ACCOMMODATIONS					
# OF ROOMS		4	3		
BEDROOMS		1	2		
FIREPLACES					

HEAT & AC	B	1	2	3	U
NO HEAT	☐	☐	☐	☐	☐
CTRL HEAT	☐	■	■	☐	☐
HW/STEAM	☐	☐	☐	☐	☐
ELECTRIC	☐	☐	☐	☐	☐
HEAT PUMP	☐	☐	☐	☐	☐
FLR/WALL	☐	☐	☐	☐	☐
STVE/SPCE	☐	☐	☐	☐	☐
GEOTHERMAL	☐	☐	☐	☐	☐
OUTSIDE	☐	☐	☐	☐	☐
CTRL A/C	☐	■	■	☐	☐

PLUMBING					BASE ■
X FULL BATH		1			
X HALF BATH		1			
X FIXTURES		1			

FLOOR	AREA	CONST	VALUE
1	1352	FR	189,970
2ND	1020	FR	68,800

SUBTOTAL			258,770
MULTI-FAMILY #	0		0
BUILDING TYPE	100%		0
BSMT FINISH	0	S.F.	0
FIREPLACE #	0		0
HEATING	0	S.F.	0
AIR COND	2,372	S.F.	3,910
PLUMBING #	6		7,260
GARAGES & CARPORTS			17,300
EXTRA FEATURES			1,000
SUBTOTAL			288,240
GRADE FACTOR			105 %
UNADJUSTED VALUE			302,650
FACTOR			100 %

SKETCH

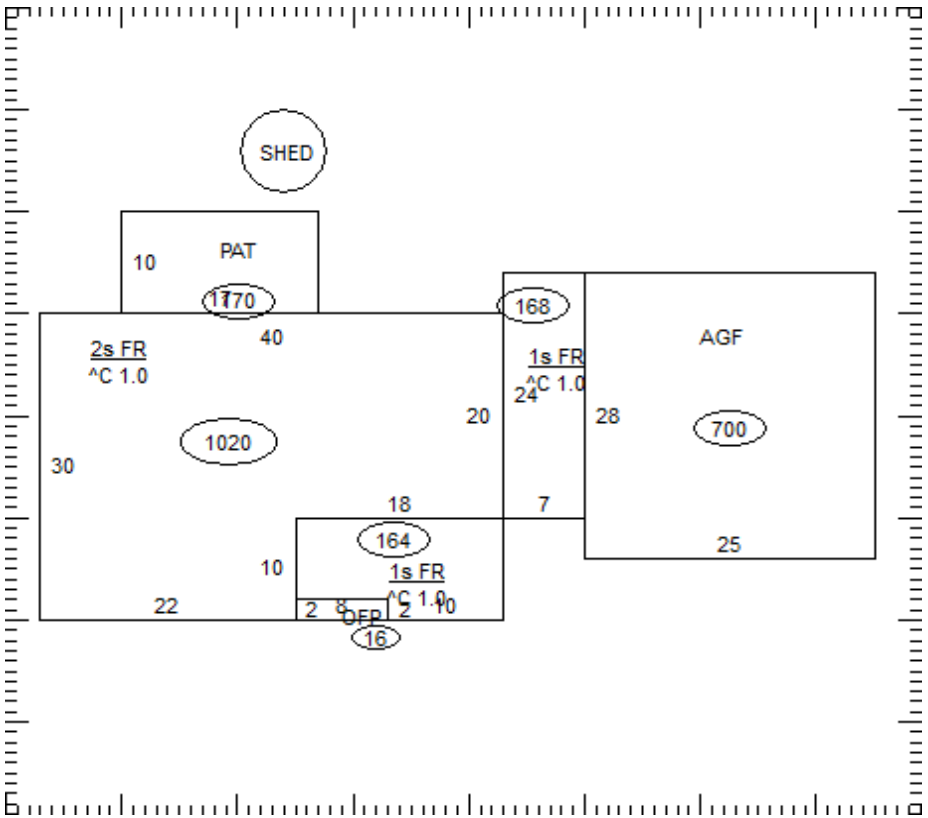

OCCUPANCY	ST.HT	SIZE	AREA	GRADE	PRICE	AGE	REMD	CND	UNADJ VAL	PHYS	PHYS VAL	FUNC	TRUE VAL
DWELLING	2	SK	2,372	C+		1990		A	302,650	26	223,960		235,200
1 Shed		8x10	80							100			0
2													
3													
4													
5													
6													
7													
8													
9													
10													
11													
											TOTAL		235,200

06-046800.0700

COMMENTS

VINYL SIDING
Dwelling has an Economic Factor of 105% (Rollback Basis=$253,400)