06-030000.0000

DULEBOHN AUSTIN
DULEBOHN AUSTIN
8715 ALPHA ST
CELINA, OH 45822

CENTER TWP / CELINA SD

06-14-303-004

LEGAL INFORMATION
NEPTUNE TOWN LOTS

RTS: 003-05-14 LOT#: 34

Property Class: 510
Neighborhood 000620-RS20
Map: 08
Block:
Card: 29
Bk: Pg:

	OWNERSHIP	ADDRESS	CITY	STATE	ZIP	DATE	AMOUNT	DEED:CONV#	JS	VALID
1	DULEBOHN AUSTIN	8715 ALPHA ST	CELINA	OH	45822	07/17/2020	85,000	WDC : 462	☐	■
2	ERSKINE TRAVIS A	8715 ALPHA ST	CELINA	OH	45822	02/07/2020	0	QCE : X : 0	☐	☐
3	ERSKINE DAVID ALLEN	8715 ALPHA ST	CELINA	OH	45822	12/20/2010	57,500	WDC : A : 714	☐	■

X: Signature | ☐ TTO | LISTER: JO | DATE: 11/10/2004 | TIME: 12:07:13 PM | ■ LETTER | ☐ LETTER REC'D | GIS CODE

STREET/ROAD	TOPOGRAPHY	PU-UTILITIES-PR	NEIGHBORHOOD	INFLUENCE FACTORS	
■ PAVED	■ LEVEL	☐ WATER ■	☐ IMPROVING	☐ A. NO ROAD	☐ F. RESTRICT
☐ GRAVEL	☐ HIGH	☐ SEWER ■	■ STATIC	☐ B. TOPGRHY	☐ G. WOOD LT
☐ DIRT	☐ LOW	■ GAS ☐	☐ DECLINING	☐ C. Ex Front	☐ H. VACANCY
☐ SIDEWALKS	☐ ROLLING	■ ELECTRIC ☐	☐ OLD	☐ D. QUANTITY	☐ I. WATER FRONT
☐ CURBS	☐ STANDARD	☐ STANDARD	☐ STANDARD	☐ E. SZ/SHAPE	☐ J. OTHER/CDU

PROPERTY LOCATION
8715 ALPHA ST, NEPTUNE

COMMENT
TY2022:Net Gen=$948.90, Other Assessment=$30.00
DE17 DESKTOP RVW CHG: COR OUTBLDGS
DE21 RMV HOMESTEAD CREDIT
DE21 RMV OWN OCC CREDIT; DID NOT RET APP

LAND COMPUTATIONS

LAND TYPE	SIZE	M RATE C	INF	M VALUE C
F:Front	F66 D132	ST160 DP94 ADJ150		9,900 0
			TOTAL	9,900 0

VALUATION SUMMARY

VALUE YEAR		2023	2020	2017	2017				
REASON FOR CHANGE		RAPP	RAPP	RAPP	MISC				
APPRAISED VALUE	LAND	9,900	6,000	5,000	5,000				
	IMPR	62,900	51,500	46,200	46,400				
	TOTAL	72,800	57,500	51,200	51,400				
ASSESSED VALUE	LAND	3,470	2,100	1,750	1,750				
	IMPR	22,020	18,030	16,170	16,240				
	TOTAL	25,490	20,130	17,920	17,990				

OCCUPANCY	EXTERIOR
■ SF ☐ DU ☐ TR	■ WOOD
☐ CONVERSION	☐ STUCCO
BUILDING TYPE	☐ ALM/VYNL
☐ MOBILE HOME	☐ CONC BLK
☐ BI/TR LEVEL	☐ METAL
☐ MOD/MAN	☐ BRICK
☐ _____	☐ STONE

ROOFING	ROOF TYPE
☐ METAL	■ GABLE
☐ SLT/TLE	☐ HIP
■ SHINGLES	☐ GAMBREL
☐ SHAKES	☐ MANSARD
☐ COMPOSITE	☐ FLAT

FLOORS	B	1	2	3	U
CONCRETE	☐	☐	☐	☐	☐
WOOD	☐	■	☐	☐	☐
TILE/COMPO	☐	☐	☐	☐	☐
CARPET	☐	☐	☐	☐	☐

INT. FINISH	B	1	2	3	U
PLASTER/DW	☐	■	☐	☐	☐
PANELING	☐	☐	☐	☐	☐
UNFINISHED	☐	☐	☐	☐	☐

ACCOMMODATIONS					
# OF ROOMS		5			
BEDROOMS		2			
FIREPLACES					

HEAT & AC	B	1	2	3	U
NO HEAT	☐	☐	☐	☐	☐
CTRL HEAT	☐	■	☐	☐	☐
HW/STEAM	☐	☐	☐	☐	☐
ELECTRIC	☐	☐	☐	☐	☐
HEAT PUMP	☐	☐	☐	☐	☐
FLR/WALL	☐	☐	☐	☐	☐
STVE/SPCE	☐	☐	☐	☐	☐
GEOTHERMAL	☐	☐	☐	☐	☐
OUTSIDE	☐	☐	☐	☐	☐
CTRL A/C	☐	☐	☐	☐	☐

PLUMBING	BASE ■				
X FULL BATH					
X HALF BATH					
X FIXTURES					

FLOOR	AREA	CONST	VALUE
1	956	FR	154,180

SUBTOTAL		154,180
MULTI-FAMILY #	0	0
BUILDING TYPE	100%	0
BSMT FINISH	0 S.F.	0
FIREPLACE #	0	0
HEATING	0 S.F.	0
AIR COND	0 S.F.	0
PLUMBING #	0	0
GARAGES & CARPORTS		14,200
EXTRA FEATURES		1,500
SUBTOTAL		169,880
GRADE FACTOR		95 %
UNADJUSTED VALUE		161,390
FACTOR		100 %

SKETCH

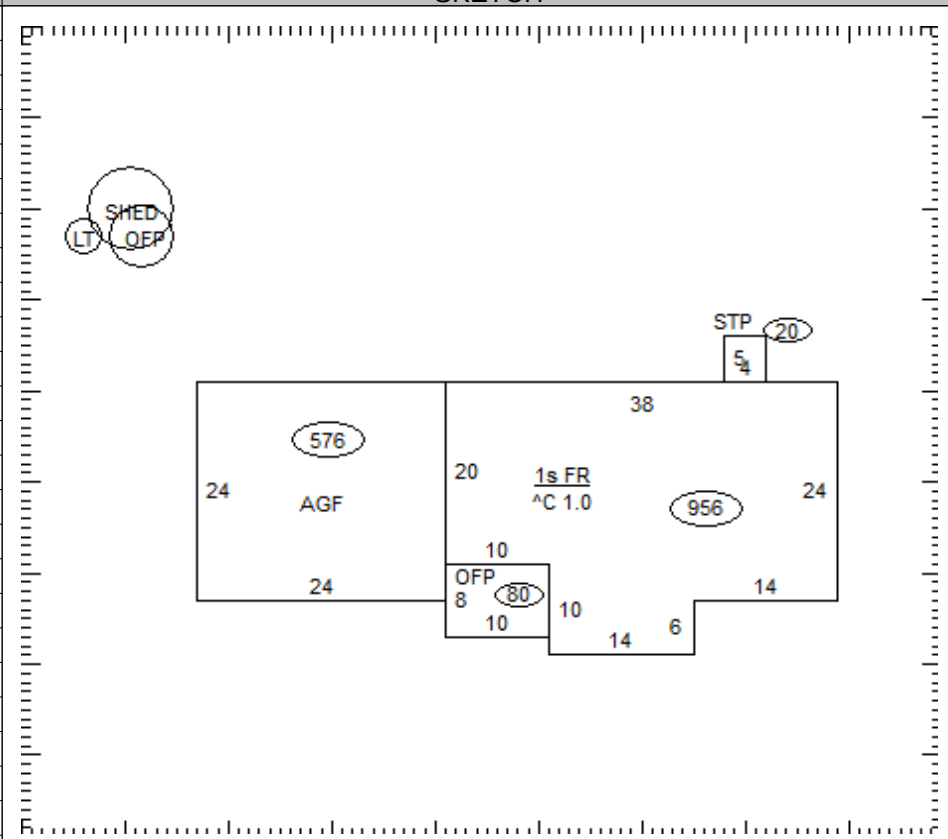

OCCUPANCY	ST.HT	SIZE	AREA	GRADE	PRICE	AGE	REMD	CND	UNADJ VAL	PHYS	PHYS VAL	FUNC	TRUE VAL
DWELLING	1	SK	956	C-		1952		A	161,390	45	88,760		62,100
1 Shed	PP	12x12	144	C		2000		A		37			0
2 OFP		4x12	48	C	16.04	2000		A	770	37	490		500
3 Lean - To		9x10	90	C	4.80	2000		A	430	37	270		300
4													
5													
6													
7													
8													
9													
10													
11													
											TOTAL		62,900

06-030000.0000

COMMENTS

ASBESTOS SIDING IN NEPTUNE
Dwelling has an Economic Factor of 70%

06-030000.0000

DULEBOHN AUSTIN
DULEBOHN AUSTIN
8715 ALPHA ST
CELINA, OH 45822

CENTER TWP / CELINA SD

06-14-303-004

LEGAL INFORMATION
NEPTUNE TOWN LOTS

RTS: 003-05-14 LOT#: 34

Property Class: 510
Neighborhood 000620-RS20
Map: 08
Block:
Card: 29
Bk: Pg:

	OWNERSHIP	ADDRESS	CITY	STATE	ZIP	DATE	AMOUNT	DEED:CONV#	JS	VALID
1	REYNOLDS LEESA R	8715 ALPHA ST	CELINA	OH	45822	05/16/1994	50,000	: A : 0	☐	■
2							0	0	☐	☐
3							0	0	☐	☐

X: Signature | ☐ TTO | LISTER: JO | DATE: 11/10/2004 | TIME: 12:07:13 PM | ■ LETTER | ☐ LETTER REC'D | GIS CODE

STREET/ROAD	TOPOGRAPHY	PU-UTILITIES-PR	NEIGHBORHOOD	INFLUENCE FACTORS	
■ PAVED	■ LEVEL	☐ WATER ■	☐ IMPROVING	☐ A. NO ROAD	☐ F. RESTRICT
☐ GRAVEL	☐ HIGH	☐ SEWER ■	■ STATIC	☐ B. TOPGRHY	☐ G. WOOD LT
☐ DIRT	☐ LOW	■ GAS ☐	☐ DECLINING	☐ C. Ex Front	☐ H. VACANCY
☐ SIDEWALKS	☐ ROLLING	■ ELECTRIC ☐	☐ OLD	☐ D. QUANTITY	☐ I. WATER FRONT
☐ CURBS	☐ STANDARD	☐ STANDARD	☐ STANDARD	☐ E. SZ/SHAPE	☐ J. OTHER/CDU

PROPERTY LOCATION
8715 ALPHA ST, NEPTUNE

COMMENT

LAND COMPUTATIONS

LAND TYPE	SIZE	M	RATE	C	INF	M	VALUE	C
					TOTAL		9,900	0

VALUATION SUMMARY

VALUE YEAR									
REASON FOR CHANGE									
APPRAISED VALUE	LAND								
	IMPR								
	TOTAL								
ASSESSED VALUE	LAND								
	IMPR								
	TOTAL								

OCCUPANCY	EXTERIOR
☐SF ☐DU ☐TR	☐ WOOD
☐CONVERSION	☐ STUCCO
BUILDING TYPE	☐ ALM/VYNL
☐ MOBILE HOME	☐ CONC BLK
☐ BI/TR LEVEL	☐ METAL
☐ MOD/MAN	☐ BRICK
☐ _____	☐ STONE

ROOFING	ROOF TYPE
☐ METAL	☐ GABLE
☐ SLT/TLE	☐ HIP
☐ SHINGLES	☐ GAMBREL
☐ SHAKES	☐ MANSARD
☐ COMPOSITE	☐ FLAT

FLOORS	B	1	2	3	U
CONCRETE	☐	☐	☐	☐	☐
WOOD	☐	☐	☐	☐	☐
TILE/COMPO	☐	☐	☐	☐	☐
CARPET	☐	☐	☐	☐	☐

INT. FINISH	B	1	2	3	U
PLASTER/DW	☐	☐	☐	☐	☐
PANELING	☐	☐	☐	☐	☐
UNFINISHED	☐	☐	☐	☐	☐

ACCOMMODATIONS					
# OF ROOMS					
BEDROOMS					
FIREPLACES					

HEAT & AC	B	1	2	3	U
NO HEAT	☐	☐	☐	☐	☐
CTRL HEAT	☐	☐	☐	☐	☐
HW/STEAM	☐	☐	☐	☐	☐
ELECTRIC	☐	☐	☐	☐	☐
HEAT PUMP	☐	☐	☐	☐	☐
FLR/WALL	☐	☐	☐	☐	☐
STVE/SPCE	☐	☐	☐	☐	☐
GEOTHERMAL	☐	☐	☐	☐	☐
OUTSIDE	☐	☐	☐	☐	☐
CTRL A/C	☐	☐	☐	☐	☐

PLUMBING					BASE ☐
X FULL BATH					
X HALF BATH					
X FIXTURES					

FLOOR	AREA	CONST	VALUE

SUBTOTAL		0
MULTI-FAMILY #	0	0
BUILDING TYPE	000%	0
BSMT FINISH	0 S.F.	0
FIREPLACE #	0	0
HEATING	0 S.F.	0
AIR COND	0 S.F.	0
PLUMBING #	0	0
GARAGES & CARPORTS		0
EXTRA FEATURES		0
SUBTOTAL		0
GRADE FACTOR		%
UNADJUSTED VALUE		0
FACTOR		%

SKETCH

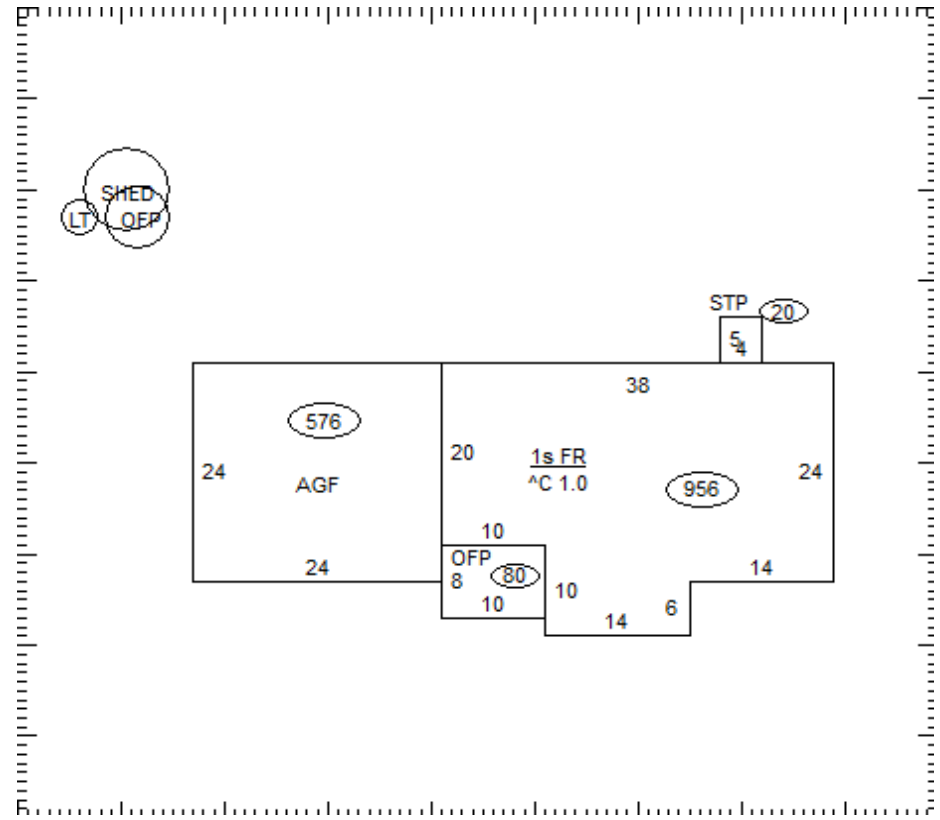

OCCUPANCY	ST.HT	SIZE	AREA	GRADE	PRICE	AGE	REMD	CND	UNADJ VAL	PHYS	PHYS VAL	FUNC	TRUE VAL
DWELLING		SK											
1													
2													
3													
4													
5													
6													
7													
8													
9													
10													
11													
												TOTAL	0

06-030000.0000

COMMENTS