05-168100.0000

BROERING CHAD A & DEBRA R
BROERING CHAD A & DEBRA R
805 EMERALD AVE
COLDWATER, OH 45828

BUTLER TWP-COLDWATER CORP / COLDWATER SD
08-28-179-009

LEGAL INFORMATION
WESTVIEW FIRST ADD

LOT#: 1273

Property Class: 510
Neighborhood 000510-TS60
Map: 14B3
Block:
Card: 46
Bk: Pg:

	OWNERSHIP	ADDRESS	CITY	STATE	ZIP	DATE	AMOUNT	DEED:CONV#	JS	VALID
1	BROERING CHAD A & DEBRA	805 EMERALD AVE	COLDWATER	OH	45828	09/01/2017	434,000	WDC : 590	☐	■
2	PAX JOAN A	805 EMERALD AVE	COLDWATER	OH	45828	09/25/1989	0	: X : 0	☐	☐
3							0	0	☐	☐

X: ☐ TTO LISTER: DATE: 04/06/2011 TIME: 12:00:00 AM ☐ LETTER ☐ LETTER REC'D GIS CODE

STREET/ROAD	TOPOGRAPHY	PU-UTILITIES-PR	NEIGHBORHOOD	INFLUENCE FACTORS	
■ PAVED	☐ LEVEL	☐ WATER ☐	☐ IMPROVING	☐ A. NO ROAD	☐ F. RESTRICT
☐ GRAVEL	☐ HIGH	☐ SEWER ☐	☐ STATIC	☐ B. TOPGRHY	☐ G. WOOD LT
☐ DIRT	☐ LOW	☐ GAS ☐	☐ DECLINING	■ C. Ex Front	☐ H. VACANCY
■ SIDEWALKS	☐ ROLLING	☐ ELECTRIC ☐	☐ OLD	☐ D. QUANTITY	☐ I. WATER FRONT
☐ CURBS	■ STANDARD	■ STANDARD	■ STANDARD	☐ E. SZ/SHAPE	☐ J. OTHER/CDU

PROPERTY LOCATION
805 EMERALD AVE, COLDWATER

COMMENT
TY2022:Net Gen=$6,380.70, Other Assessment=$0.00
DE16 DESKTOP RVW CHG: COR BW SIZ, COR BSMNT AREA
DE11 ADD BAY WINDOW
DE18 REMOVE OWN OCC didn't return app

LAND COMPUTATIONS

LAND TYPE	SIZE	M RATE C	INF	M VALUE C
F:Front	F201 D218	ST445 DP114 ADJ507	C:0.07	94,800 0
			TOTAL	94,800 0

VALUATION SUMMARY

VALUE YEAR		2023	2020	2017					
REASON FOR CHANGE		RAPP	RAPP	RAPP					
APPRAISED VALUE	LAND	94,800	74,800	59,600					
	IMPR	492,300	409,500	360,100					
	TOTAL	587,100	484,300	419,700					
ASSESSED VALUE	LAND	33,180	26,180	20,860					
	IMPR	172,310	143,330	126,040					
	TOTAL	205,490	169,510	146,900					

OCCUPANCY	EXTERIOR
■ SF ☐ DU ☐ TR	☐ WOOD
☐ CONVERSION	☐ STUCCO
BUILDING TYPE	☐ ALM/VYNL
☐ MOBILE HOME	☐ CONC BLK
☐ BI/TR LEVEL	☐ METAL
☐ MOD/MAN	■ BRICK
☐ _____	☐ STONE

ROOFING	ROOF TYPE
☐ METAL	■ GABLE
☐ SLT/TLE	☐ HIP
■ SHINGLES	☐ GAMBREL
☐ SHAKES	☐ MANSARD
☐ COMPOSITE	☐ FLAT

FLOORS	B	1	2	3	U
CONCRETE	■	☐	☐	☐	☐
WOOD	☐	■	☐	☐	☐
TILE/COMPO	☐	☐	☐	☐	☐
CARPET	■	■	☐	☐	☐

INT. FINISH	B	1	2	3	U
PLASTER/DW	■	■	☐	☐	☐
PANELING	☐	☐	☐	☐	☐
UNFINISHED	■	☐	☐	☐	☐

ACCOMMODATIONS					
# OF ROOMS		9			
BEDROOMS		3			
FIREPLACES		1			

HEAT & AC	B	1	2	3	U
NO HEAT	☐	☐	☐	☐	☐
CTRL HEAT	■	■	☐	☐	☐
HW/STEAM	☐	☐	☐	☐	☐
ELECTRIC	☐	☐	☐	☐	☐
HEAT PUMP	☐	☐	☐	☐	☐
FLR/WALL	☐	☐	☐	☐	☐
STVE/SPCE	☐	☐	☐	☐	☐
GEOTHERMAL	☐	☐	☐	☐	☐
OUTSIDE	☐	☐	☐	☐	☐
CTRL A/C	☐	■	☐	☐	☐

PLUMBING					BASE ■
X FULL BATH		1			
X HALF BATH		2			
X FIXTURES		1			

FLOOR	AREA	CONST	VALUE
1	3301	BRK	359,080
BSMT	3301		47,200
SUBTOTAL			406,280
MULTI-FAMILY #	0		0
BUILDING TYPE	100%		0
BSMT FINISH	1,650 S.F.		23,600
FIREPLACE #	1		4,400
HEATING	0 S.F.		0
AIR COND	3,301 S.F.		5,450
PLUMBING #	8		9,680
GARAGES & CARPORTS			21,700
EXTRA FEATURES			48,500
SUBTOTAL			519,610
GRADE FACTOR			120 %
UNADJUSTED VALUE			623,530
FACTOR			100 %

SKETCH

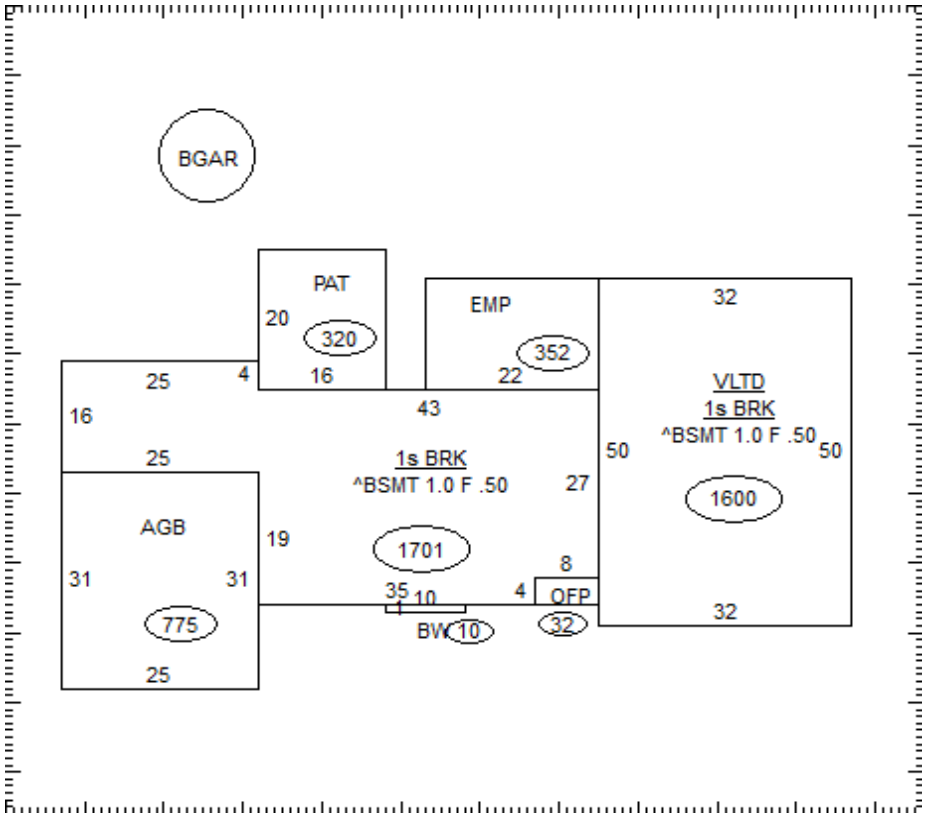

OCCUPANCY	ST.HT	SIZE	AREA	GRADE	PRICE	AGE	REMD	CND	UNADJ VAL	PHYS	PHYS VAL	FUNC	TRUE VAL
DWELLING	1	SK	3,301	B		1987		A	623,530	26	461,410		484,500
1 Gar - Brick		23x36	828	C	28.58	1987		A	23,660	67	7,810		7,800
2													
3													
4													
5													
6													
7													
8													
9													
10													
11													
											TOTAL		492,300

05-168100.0000

COMMENTS

Dwelling has an Economic Factor of 105%