05-130300.0000

HOMAN JEANNE R TRUSTEE
HOMAN JEANNE R TRUSTEE
206 HILLCREST DR
COLDWATER, OH 45828

BUTLER TWP-COLDWATER CORP / COLDWATER SD
08-27-381-014

LEGAL INFORMATION
RESTFUL ACRES 3RD

LOT#: 907

Property Class: 510
Neighborhood 000501-TM40
Map: 14A6
Block:
Card: 27
Bk: Pg:

	OWNERSHIP	ADDRESS	CITY	STATE	ZIP	DATE	AMOUNT	DEED:CONV#	JS	VALID
1	HOMAN JEANNE R TRUSTEE	206 HILLCREST DR	COLDWATER	OH	45828	04/12/2022	0	QCE : X : 0	☐	☐
2	JUTTE JEANNE	206 HILLCREST DR	COLDWATER	OH	45828	12/17/2019	0	QCE : X : 0	☐	☐
3	JUTTE JEANNE	206 HILLCREST DR	COLDWATER	OH	45828	05/22/2019	177,000	WDC : 337	☐	■

X: ☐ TTO LISTER: NS DATE: 02/25/2005 TIME: 12:00:00 AM ☐ LETTER ☐ LETTER REC'D GIS CODE

STREET/ROAD	TOPOGRAPHY	PU-UTILITIES-PR	NEIGHBORHOOD	INFLUENCE FACTORS	
■ PAVED	■ LEVEL	☐ WATER ☐	☐ IMPROVING	☐ A. NO ROAD	☐ F. RESTRICT
☐ GRAVEL	☐ HIGH	☐ SEWER ☐	■ STATIC	☐ B. TOPGRHY	☐ G. WOOD LT
☐ DIRT	☐ LOW	☐ GAS ☐	☐ DECLINING	☐ C. Ex Front	☐ H. VACANCY
■ SIDEWALKS	☐ ROLLING	☐ ELECTRIC ☐	☐ OLD	☐ D. QUANTITY	☐ I. WATER FRONT
☐ CURBS	☐ STANDARD	■ STANDARD	☐ STANDARD	☐ E. SZ/SHAPE	☐ J. OTHER/CDU

PROPERTY LOCATION
206 HILLCREST DR, COLDWATER

COMMENT
TY2022:Net Gen=$1,807.04, Other Assessment=$0.00
DE09 PER DATA MAILER ADDED AC
DE16 DESKTOP RVW CHG: ADD SHED
DE22 COR WDDK MSMNTS; DESKTOP RVW

LAND COMPUTATIONS

LAND TYPE	SIZE	M RATE C	INF	M VALUE C
F:Front	F83 D115	ST350 DP87 ADJ305		25,300 0
			TOTAL	25,300 0

VALUATION SUMMARY

VALUE YEAR		2023	2022	2020	2017				
REASON FOR CHANGE		RAPP	MISC	RAPP	RAPP				
APPRAISED VALUE	LAND	25,300	16,500	16,500	12,300				
	IMPR	153,200	124,000	122,600	111,100				
	TOTAL	178,500	140,500	139,100	123,400				
ASSESSED VALUE	LAND	8,860	5,780	5,780	4,310				
	IMPR	53,620	43,400	42,910	38,890				
	TOTAL	62,480	49,180	48,690	43,200				

OCCUPANCY	EXTERIOR
■ SF ☐ DU ☐ TR	☐ WOOD
☐ CONVERSION	☐ STUCCO
BUILDING TYPE	■ ALM/VYNL
☐ MOBILE HOME	☐ CONC BLK
☐ BI/TR LEVEL	☐ METAL
☐ MOD/MAN	■ BRICK
☐ _____	☐ STONE

ROOFING	ROOF TYPE
☐ METAL	■ GABLE
☐ SLT/TLE	☐ HIP
■ SHINGLES	☐ GAMBREL
☐ SHAKES	☐ MANSARD
☐ COMPOSITE	☐ FLAT

FLOORS	B	1	2	3	U
CONCRETE	■	☐	☐	☐	☐
WOOD	☐	☐	☐	☐	☐
TILE/COMPO	■	■	☐	☐	☐
CARPET	☐	■	☐	☐	☐

INT. FINISH	B	1	2	3	U
PLASTER/DW	☐	■	☐	☐	☐
PANELING	■	☐	☐	☐	☐
UNFINISHED	☐	☐	☐	☐	☐

ACCOMMODATIONS					
# OF ROOMS		6			
BEDROOMS		3			
FIREPLACES					

HEAT & AC	B	1	2	3	U
NO HEAT	☐	☐	☐	☐	☐
CTRL HEAT	■	■	☐	☐	☐
HW/STEAM	☐	☐	☐	☐	☐
ELECTRIC	■	■	☐	☐	☐
HEAT PUMP	☐	☐	☐	☐	☐
FLR/WALL	☐	☐	☐	☐	☐
STVE/SPCE	☐	☐	☐	☐	☐
GEOTHERMAL	☐	☐	☐	☐	☐
OUTSIDE	☐	☐	☐	☐	☐
CTRL A/C	■	■	☐	☐	☐

PLUMBING					BASE ■
X FULL BATH					
X HALF BATH					
X FIXTURES					

FLOOR	AREA	CONST	VALUE
1	1232	FR	182,400
BSMT	1232		17,620
SUBTOTAL			200,020
MULTI-FAMILY #	0		0
BUILDING TYPE	100%		0
BSMT FINISH	924 S.F.		13,210
FIREPLACE #	0		0
HEATING	0 S.F.		0
AIR COND	2,156 S.F.		3,550
PLUMBING #	0		0
GARAGES & CARPORTS			8,300
EXTRA FEATURES			5,200
SUBTOTAL			230,280
GRADE FACTOR			105 %
UNADJUSTED VALUE			241,790
FACTOR			100 %

SKETCH

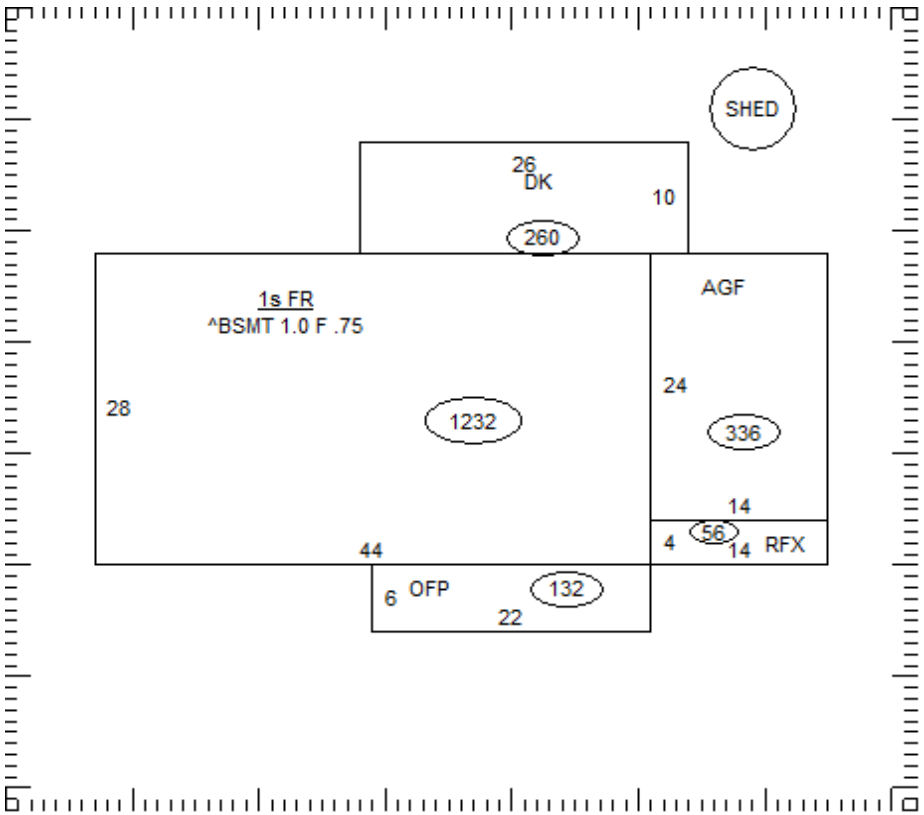

OCCUPANCY	ST.HT	SIZE	AREA	GRADE	PRICE	AGE	REMD	CND	UNADJ VAL	PHYS	PHYS VAL	FUNC	TRUE VAL
DWELLING	1	SK	1,232	C+		1967		A	241,790	40	145,070		152,300
1 Shed		16x16	256	C	7.70	1990		A	1,970	57	850		900
2													
3													
4													
5													
6													
7													
8													
9													
10													
11													
											TOTAL		153,200

05-130300.0000

COMMENTS

Dwelling has an Economic Factor of 105% (Rollback Basis=$177,600)

05-130300.0000

HOMAN JEANNE R TRUSTEE
HOMAN JEANNE R TRUSTEE
206 HILLCREST DR
COLDWATER, OH 45828

BUTLER TWP-COLDWATER CORP / COLDWATER SD
08-27-381-014

LEGAL INFORMATION
RESTFUL ACRES 3RD

LOT#: 907

Property Class: 510
Neighborhood 000501-TM40
Map: 14A6
Block:
Card: 27
Bk: Pg:

	OWNERSHIP	ADDRESS	CITY	STATE	ZIP	DATE	AMOUNT	DEED:CONV#	JS	VALID
1	FIELY DAVID R	206 HILLCREST DR	COLDWATER	OH	45828	11/28/2012	10,000	WDC : F : 761	☐	☐
2	FIELY LAVERN H & JANE &	206 HILLCREST DR	COLDWATER	OH	45828	07/31/2001	77,000	: A : 0	☐	■
3							0	0	☐	☐

X: ☐ TTO LISTER: NS DATE: 02/25/2005 TIME: 12:00:00 AM ☐ LETTER ☐ LETTER REC'D GIS CODE

STREET/ROAD	TOPOGRAPHY	PU-UTILITIES-PR	NEIGHBORHOOD	INFLUENCE FACTORS	
■ PAVED	■ LEVEL	☐ WATER ☐	☐ IMPROVING	☐ A. NO ROAD	☐ F. RESTRICT
☐ GRAVEL	☐ HIGH	☐ SEWER ☐	■ STATIC	☐ B. TOPGRHY	☐ G. WOOD LT
☐ DIRT	☐ LOW	☐ GAS ☐	☐ DECLINING	☐ C. Ex Front	☐ H. VACANCY
■ SIDEWALKS	☐ ROLLING	☐ ELECTRIC ☐	☐ OLD	☐ D. QUANTITY	☐ I. WATER FRONT
☐ CURBS	☐ STANDARD	■ STANDARD	☐ STANDARD	☐ E. SZ/SHAPE	☐ J. OTHER/CDU

PROPERTY LOCATION
206 HILLCREST DR, COLDWATER

COMMENT

LAND COMPUTATIONS

LAND TYPE	SIZE	M RATE C	INF	M VALUE C
			TOTAL	25,300 0

VALUATION SUMMARY

VALUE YEAR									
REASON FOR CHANGE									
APPRAISED VALUE	LAND								
	IMPR								
	TOTAL								
ASSESSED VALUE	LAND								
	IMPR								
	TOTAL								

OCCUPANCY	EXTERIOR
☐SF ☐DU ☐TR	☐ WOOD
☐CONVERSION	☐ STUCCO
BUILDING TYPE	☐ ALM/VYNL
☐ MOBILE HOME	☐ CONC BLK
☐ BI/TR LEVEL	☐ METAL
☐ MOD/MAN	☐ BRICK
☐ _____	☐ STONE

ROOFING	ROOF TYPE
☐ METAL	☐ GABLE
☐ SLT/TLE	☐ HIP
☐ SHINGLES	☐ GAMBREL
☐ SHAKES	☐ MANSARD
☐ COMPOSITE	☐ FLAT

FLOORS	B	1	2	3	U
CONCRETE	☐	☐	☐	☐	☐
WOOD	☐	☐	☐	☐	☐
TILE/COMPO	☐	☐	☐	☐	☐
CARPET	☐	☐	☐	☐	☐

INT. FINISH	B	1	2	3	U
PLASTER/DW	☐	☐	☐	☐	☐
PANELING	☐	☐	☐	☐	☐
UNFINISHED	☐	☐	☐	☐	☐

ACCOMMODATIONS					
# OF ROOMS					
BEDROOMS					
FIREPLACES					

HEAT & AC	B	1	2	3	U
NO HEAT	☐	☐	☐	☐	☐
CTRL HEAT	☐	☐	☐	☐	☐
HW/STEAM	☐	☐	☐	☐	☐
ELECTRIC	☐	☐	☐	☐	☐
HEAT PUMP	☐	☐	☐	☐	☐
FLR/WALL	☐	☐	☐	☐	☐
STVE/SPCE	☐	☐	☐	☐	☐
GEOTHERMAL	☐	☐	☐	☐	☐
OUTSIDE	☐	☐	☐	☐	☐
CTRL A/C	☐	☐	☐	☐	☐

PLUMBING	BASE ☐				
X FULL BATH					
X HALF BATH					
X FIXTURES					

FLOOR	AREA	CONST	VALUE

SUBTOTAL		0
MULTI-FAMILY #	0	0
BUILDING TYPE	000%	0
BSMT FINISH	0 S.F.	0
FIREPLACE #	0	0
HEATING	0 S.F.	0
AIR COND	0 S.F.	0
PLUMBING #	0	0
GARAGES & CARPORTS		0
EXTRA FEATURES		0
SUBTOTAL		0
GRADE FACTOR		%
UNADJUSTED VALUE		0
FACTOR		%

SKETCH

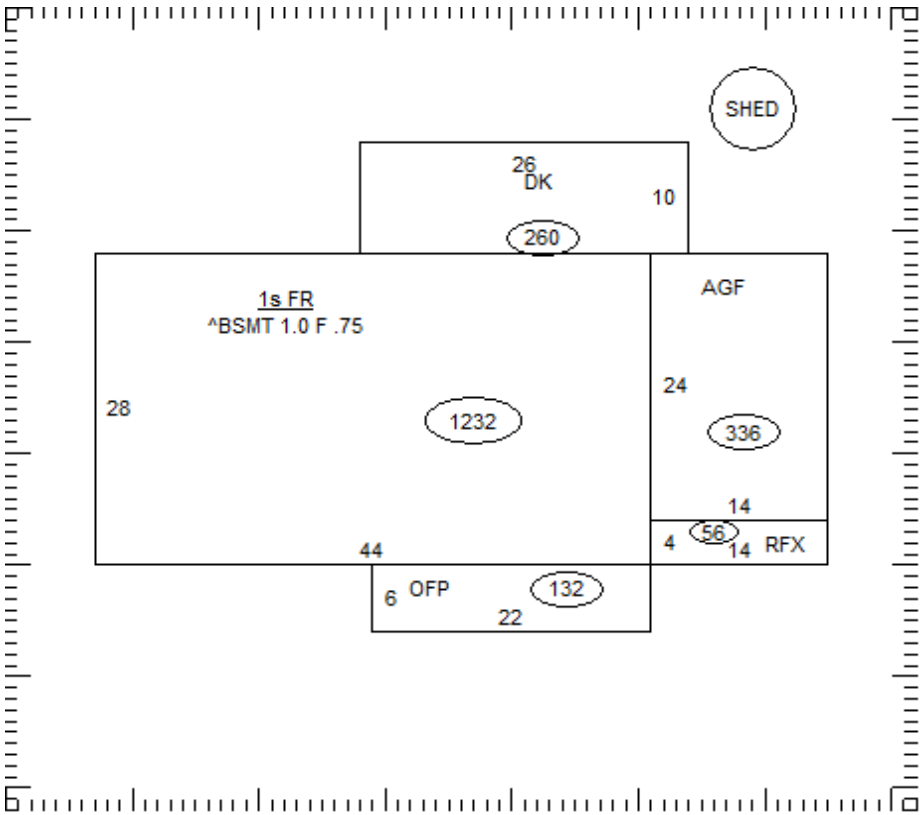

OCCUPANCY	ST.HT	SIZE	AREA	GRADE	PRICE	AGE	REMD	CND	UNADJ VAL	PHYS	PHYS VAL	FUNC	TRUE VAL
DWELLING		SK											
1													
2													
3													
4													
5													
6													
7													
8													
9													
10													
11													
												TOTAL	0

05-130300.0000

COMMENTS