05-115300.0000

HOYING MASON S & ERIN L
HOYING MASON S & ERIN L
219 E SYCAMORE ST
COLDWATER, OH 45828

BUTLER TWP-COLDWATER CORP / COLDWATER SD
08-34-152-001

LEGAL INFORMATION
LEFELD FIRST ADDITION LOT
764

QUALIFIED CREDITS:
HOMESTEAD

Property Class: 510
Neighborhood
000503-TM50
Map: 14D3
Block:
Card: 53
Bk: Pg:

	OWNERSHIP	ADDRESS	CITY	STATE	ZIP	DATE	AMOUNT	DEED:CONV#	JS	VALID
1	HOYING MASON S & ERIN L	219 E SYCAMORE ST	COLDWATER	OH	45828	04/19/2023	210,000	SUC : 202	■	■
2	GILLIS CHARLENE F	219 E SYCAMORE ST	COLDWATER	OH	45828	01/17/2023	0	: X : 0	☐	☐
3	GILLIS CHARLENE F	219 E SYCAMORE ST	COLDWATER	OH	45828	11/21/2005	86,000	WDC : A : 986	☐	■

X: ☐ TTO LISTER: NS DATE: 02/09/2005 TIME: 12:00:00 AM ☐ LETTER ■ LETTER REC'D GIS CODE

STREET/ROAD	TOPOGRAPHY	PU-UTILITIES-PR	NEIGHBORHOOD	INFLUENCE FACTORS	
■ PAVED	■ LEVEL	☐ WATER ☐	☐ IMPROVING	☐ A. NO ROAD	☐ F. RESTRICT
☐ GRAVEL	☐ HIGH	☐ SEWER ☐	■ STATIC	☐ B. TOPGRHY	☐ G. WOOD LT
☐ DIRT	☐ LOW	☐ GAS ☐	☐ DECLINING	☐ C. Ex Front	☐ H. VACANCY
■ SIDEWALKS	☐ ROLLING	☐ ELECTRIC ☐	☐ OLD	☐ D. QUANTITY	☐ I. WATER FRONT
☐ CURBS	☐ STANDARD	■ STANDARD	☐ STANDARD	☐ E. SZ/SHAPE	☐ J. OTHER/CDU

PROPERTY LOCATION
219 E SYCAMORE ST, COLDWATER

COMMENT
TY2022:Net Gen=$1,306.30, Other Assessment=$0.00

LAND COMPUTATIONS

LAND TYPE	SIZE	M RATE C	INF	M VALUE C
F:Front	F86 D116	ST395 DP87 ADJ344		29,600 0
			TOTAL	29,600 0

VALUATION SUMMARY

VALUE YEAR		2023	2020	2017					
REASON FOR CHANGE		RAPP	RAPP	RAPP					
APPRAISED VALUE	LAND	29,600	18,600	15,000					
	IMPR	139,400	108,000	98,800					
	TOTAL	169,000	126,600	113,800					
ASSESSED VALUE	LAND	10,360	6,510	5,250					
	IMPR	48,790	37,800	34,580					
	TOTAL	59,150	44,310	39,830					

OCCUPANCY	EXTERIOR
■ SF ☐ DU ☐ TR	☐ WOOD
☐ CONVERSION	☐ STUCCO
BUILDING TYPE	☐ ALM/VYNL
☐ MOBILE HOME	☐ CONC BLK
☐ BI/TR LEVEL	☐ METAL
☐ MOD/MAN	■ BRICK
☐ _____	☐ STONE
ROOFING	**ROOF TYPE**
☐ METAL	☐ GABLE
☐ SLT/TLE	■ HIP
■ SHINGLES	☐ GAMBREL
☐ SHAKES	☐ MANSARD
☐ COMPOSITE	☐ FLAT

FLOORS	B	1	2	3	U
CONCRETE	■	☐	☐	☐	☐
WOOD	☐	■	☐	☐	☐
TILE/COMPO	☐	☐	☐	☐	☐
CARPET	☐	■	☐	☐	☐

INT. FINISH	B	1	2	3	U
PLASTER/DW	☐	■	☐	☐	☐
PANELING	☐	☐	☐	☐	☐
UNFINISHED	■	☐	☐	☐	☐

ACCOMMODATIONS					
# OF ROOMS		6			
BEDROOMS		2			
FIREPLACES					

HEAT & AC	B	1	2	3	U
NO HEAT	☐	☐	☐	☐	☐
CTRL HEAT	☐	■	☐	☐	☐
HW/STEAM	☐	☐	☐	☐	☐
ELECTRIC	☐	☐	☐	☐	☐
HEAT PUMP	☐	☐	☐	☐	☐
FLR/WALL	☐	☐	☐	☐	☐
STVE/SPCE	☐	☐	☐	☐	☐
GEOTHERMAL	☐	☐	☐	☐	☐
OUTSIDE	☐	☐	☐	☐	☐
CTRL A/C	☐	■	☐	☐	☐

PLUMBING					BASE ■
X FULL BATH					
X HALF BATH					
X FIXTURES	1				

FLOOR	AREA	CONST	VALUE
1	1204	BRK	190,730
BSMT	1204		17,220
SUBTOTAL			207,950
MULTI-FAMILY #	0		0
BUILDING TYPE	100%		0
BSMT FINISH	0 S.F.		0
FIREPLACE #	0		0
HEATING	0 S.F.		0
AIR COND	1,204 S.F.		1,990
PLUMBING #	1		1,210
GARAGES & CARPORTS			9,800
EXTRA FEATURES			3,500
SUBTOTAL			224,450
GRADE FACTOR			105 %
UNADJUSTED VALUE			235,670
FACTOR			100 %

SKETCH

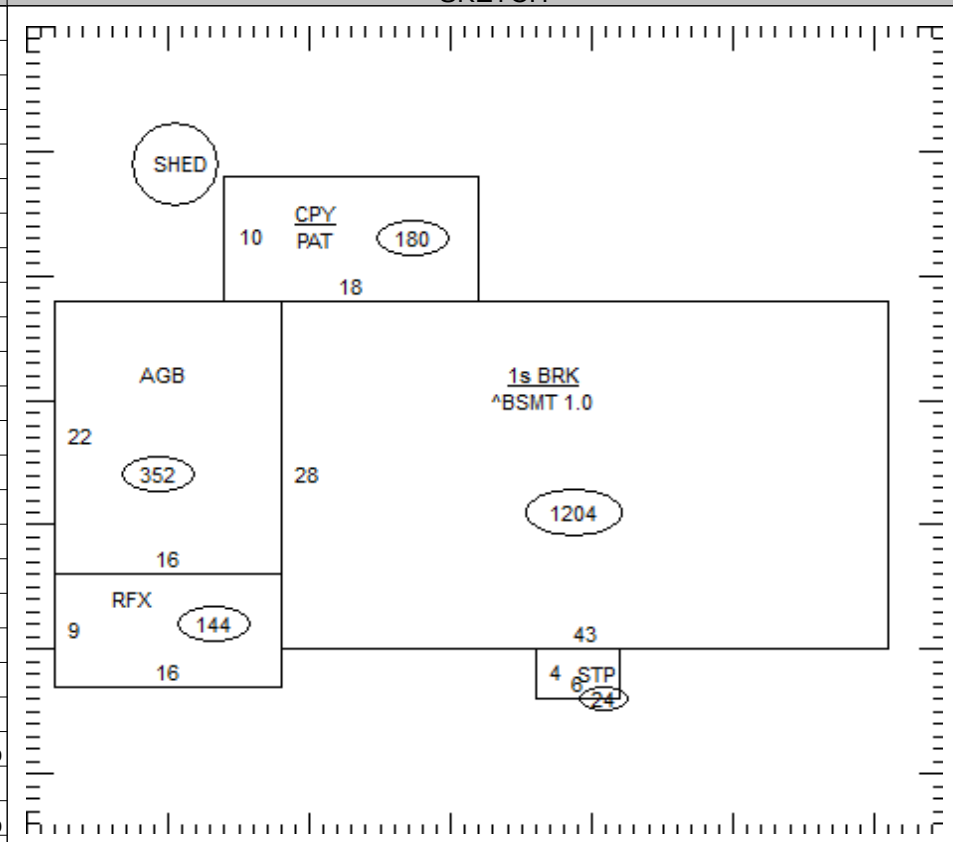

OCCUPANCY	ST.HT	SIZE	AREA	GRADE	PRICE	AGE	REMD	CND	UNADJ VAL	PHYS	PHYS VAL	FUNC	TRUE VAL
DWELLING	1	SK	1,204	C+		1959		A	235,670	42	136,690		139,400
1 Shed	PP	12x12	144	C		1990		A		57			0
2													
3													
4													
5													
6													
7													
8													
9													
10													
11													
											TOTAL		139,400

05-115300.0000

COMMENTS

Dwelling has an Economic Factor of 102%

05-115300.0000

HOYING MASON S & ERIN L
HOYING MASON S & ERIN L
219 E SYCAMORE ST
COLDWATER, OH 45828

BUTLER TWP-COLDWATER CORP / COLDWATER SD
08-34-152-001

LEGAL INFORMATION
LEFELD FIRST ADDITION LOT
764

QUALIFIED CREDITS:
HOMESTEAD

Property Class: 510
Neighborhood
000503-TM50
Map: 14D3
Block:
Card: 53
Bk: Pg:

	OWNERSHIP	ADDRESS	CITY	STATE	ZIP	DATE	AMOUNT	DEED:CONV#	JS	VALID
1	FLAUTE KENNETH J	1000 BOOTMAN DR	COLUMBUS	OH	43228	11/08/2004	70,000	WDC : A : 0	☐	■
2	FLAUTE NORBERT M	219 E SYCAMORE ST	COLDWATER	OH	45828	08/26/2004	0	QCE : X : 0	☐	☐
3	FLAUTE FAMILY TRUST	1000 BOOTMAN DR	COLUMBUS	OH	43228	03/27/1996	0	: X : 0	☐	☐

X: ☐ TTO LISTER: NS DATE: 02/09/2005 TIME: 12:00:00 AM ☐ LETTER ■ LETTER REC'D GIS CODE

STREET/ROAD	TOPOGRAPHY	PU-UTILITIES-PR	NEIGHBORHOOD	INFLUENCE FACTORS	
■ PAVED	■ LEVEL	☐ WATER ☐	☐ IMPROVING	☐ A. NO ROAD	☐ F. RESTRICT
☐ GRAVEL	☐ HIGH	☐ SEWER ☐	■ STATIC	☐ B. TOPGRHY	☐ G. WOOD LT
☐ DIRT	☐ LOW	☐ GAS ☐	☐ DECLINING	☐ C. Ex Front	☐ H. VACANCY
■ SIDEWALKS	☐ ROLLING	☐ ELECTRIC ☐	☐ OLD	☐ D. QUANTITY	☐ I. WATER FRONT
☐ CURBS	☐ STANDARD	■ STANDARD	☐ STANDARD	☐ E. SZ/SHAPE	☐ J. OTHER/CDU

PROPERTY LOCATION
219 E SYCAMORE ST, COLDWATER

COMMENT

LAND COMPUTATIONS

LAND TYPE	SIZE	M RATE C	INF	M VALUE C
			TOTAL	29,600 0

VALUATION SUMMARY

VALUE YEAR									
REASON FOR CHANGE									
APPRAISED VALUE	LAND								
	IMPR								
	TOTAL								
ASSESSED VALUE	LAND								
	IMPR								
	TOTAL								

OCCUPANCY	EXTERIOR
☐SF ☐DU ☐TR	☐ WOOD
☐CONVERSION	☐ STUCCO
BUILDING TYPE	☐ ALM/VYNL
☐ MOBILE HOME	☐ CONC BLK
☐ BI/TR LEVEL	☐ METAL
☐ MOD/MAN	☐ BRICK
☐ _____	☐ STONE

ROOFING	ROOF TYPE
☐ METAL	☐ GABLE
☐ SLT/TLE	☐ HIP
☐ SHINGLES	☐ GAMBREL
☐ SHAKES	☐ MANSARD
☐ COMPOSITE	☐ FLAT

FLOORS	B	1	2	3	U
CONCRETE	☐	☐	☐	☐	☐
WOOD	☐	☐	☐	☐	☐
TILE/COMPO	☐	☐	☐	☐	☐
CARPET	☐	☐	☐	☐	☐

INT. FINISH	B	1	2	3	U
PLASTER/DW	☐	☐	☐	☐	☐
PANELING	☐	☐	☐	☐	☐
UNFINISHED	☐	☐	☐	☐	☐

ACCOMMODATIONS					
# OF ROOMS					
BEDROOMS					
FIREPLACES					

HEAT & AC	B	1	2	3	U
NO HEAT	☐	☐	☐	☐	☐
CTRL HEAT	☐	☐	☐	☐	☐
HW/STEAM	☐	☐	☐	☐	☐
ELECTRIC	☐	☐	☐	☐	☐
HEAT PUMP	☐	☐	☐	☐	☐
FLR/WALL	☐	☐	☐	☐	☐
STVE/SPCE	☐	☐	☐	☐	☐
GEOTHERMAL	☐	☐	☐	☐	☐
OUTSIDE	☐	☐	☐	☐	☐
CTRL A/C	☐	☐	☐	☐	☐

PLUMBING	BASE ☐				
X FULL BATH					
X HALF BATH					
X FIXTURES					

FLOOR	AREA	CONST	VALUE

SUBTOTAL		0
MULTI-FAMILY #	0	0
BUILDING TYPE	000%	0
BSMT FINISH	0 S.F.	0
FIREPLACE #	0	0
HEATING	0 S.F.	0
AIR COND	0 S.F.	0
PLUMBING #	0	0
GARAGES & CARPORTS		0
EXTRA FEATURES		0
SUBTOTAL		0
GRADE FACTOR		%
UNADJUSTED VALUE		0
FACTOR		%

SKETCH

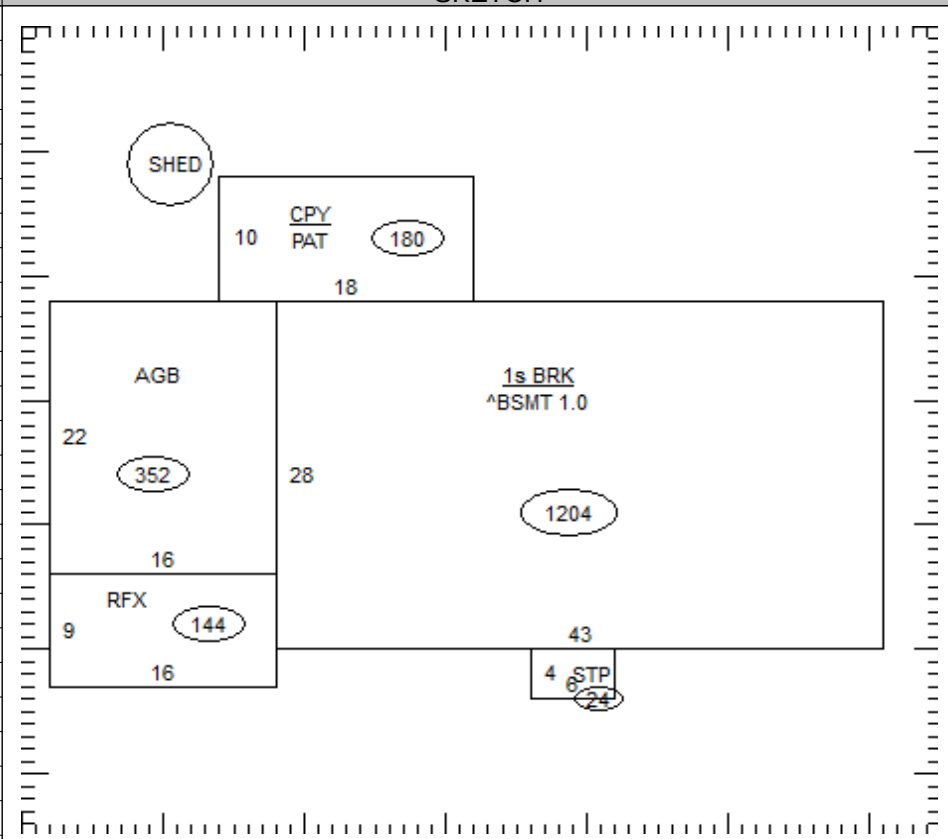

OCCUPANCY	ST.HT	SIZE	AREA	GRADE	PRICE	AGE	REMD	CND	UNADJ VAL	PHYS	PHYS VAL	FUNC	TRUE VAL
DWELLING		SK											
1													
2													
3													
4													
5													
6													
7													
8													
9													
10													
11													
												TOTAL	0

05-115300.0000

COMMENTS