05-066000.0000

BIHN NATHAN C & KELLY M
BIHN NATHAN C & KELLY M
320 E SOUTH ST
COLDWATER, OH 45828

BUTLER TWP-COLDWATER CORP / COLDWATER SD
08-34-110-011

LEGAL INFORMATION
FETZERS 2ND ADD

LOT#: 282

Property Class: 510
Neighborhood
000503-TM50
Map: 14D1
Block:
Card: 67
Bk: Pg:

	OWNERSHIP	ADDRESS	CITY	STATE	ZIP	DATE	AMOUNT	DEED:CONV#	JS	VALID
1	BIHN NATHAN C & KELLY M	320 E SOUTH ST	COLDWATER	OH	45828	06/03/2019	165,000	WDC : 375	☐	■
2	MCCANN KEVIN M & JESSICA L	320 E SOUTH ST	COLDWATER	OH	45828	09/28/2018	157,900	WDC : 744	☐	■
3	GROSS JAMES C & MARY S	320 E SOUTH ST	COLDWATER	OH	45828	06/16/1999	97,000	: A : 0	☐	■

X: ☐ TTO LISTER: NS DATE: 02/04/2005 TIME: 12:00:00 AM ☐ LETTER ■ LETTER REC'D GIS CODE

STREET/ROAD	TOPOGRAPHY	PU-UTILITIES-PR	NEIGHBORHOOD	INFLUENCE FACTORS	
■ PAVED	■ LEVEL	☐ WATER ☐	☐ IMPROVING	☐ A. NO ROAD	☐ F. RESTRICT
☐ GRAVEL	☐ HIGH	☐ SEWER ☐	■ STATIC	☐ B. TOPGRHY	☐ G. WOOD LT
☐ DIRT	☐ LOW	☐ GAS ☐	☐ DECLINING	☐ C. Ex Front	☐ H. VACANCY
■ SIDEWALKS	☐ ROLLING	☐ ELECTRIC ☐	☐ OLD	☐ D. QUANTITY	☐ I. WATER FRONT
☐ CURBS	☐ STANDARD	■ STANDARD	☐ STANDARD	☐ E. SZ/SHAPE	☐ J. OTHER/CDU

PROPERTY LOCATION
320 E SOUTH ST, COLDWATER

COMMENT
TY2022:Net Gen=$2,037.18, Other Assessment=$0.00
DE16 COR FL MISMATCH
DE20 RMV OWN OCC; DIDN'T RET APP

LAND COMPUTATIONS

LAND TYPE	SIZE	M RATE C	INF	M VALUE C
F:Front	F50 D132	ST395 DP94 ADJ371		18,600 0
			TOTAL	18,600 0

VALUATION SUMMARY

VALUE YEAR		2023	2020	2017					
REASON FOR CHANGE		RAPP	RAPP	RAPP					
APPRAISED VALUE	LAND	18,600	11,700	9,400					
	IMPR	197,400	142,900	132,300					
	TOTAL	216,000	154,600	141,700					
ASSESSED VALUE	LAND	6,510	4,100	3,290					
	IMPR	69,090	50,020	46,310					
	TOTAL	75,600	54,120	49,600					

OCCUPANCY	EXTERIOR
■ SF ☐ DU ☐ TR	☐ WOOD
☐ CONVERSION	☐ STUCCO
BUILDING TYPE	☐ ALM/VYNL
☐ MOBILE HOME	☐ CONC BLK
☐ BI/TR LEVEL	☐ METAL
☐ MOD/MAN	■ BRICK
☐ _____	☐ STONE
ROOFING	**ROOF TYPE**
☐ METAL	■ GABLE
☐ SLT/TLE	☐ HIP
■ SHINGLES	☐ GAMBREL
☐ SHAKES	☐ MANSARD
☐ COMPOSITE	☐ FLAT

FLOORS	B	1	2	3	U
CONCRETE	■	☐	☐	☐	☐
WOOD	☐	☐	■	☐	☐
TILE/COMPO	☐	☐	☐	☐	☐
CARPET	☐	■	☐	☐	☐

INT. FINISH	B	1	2	3	U
PLASTER/DW	☐	■	■	☐	☐
PANELING	☐	☐	☐	☐	☐
UNFINISHED	■	☐	☐	☐	☐

ACCOMMODATIONS					
# OF ROOMS		4			
BEDROOMS		1	2		
FIREPLACES		1			

HEAT & AC	B	1	2	3	U
NO HEAT	☐	☐	☐	☐	☐
CTRL HEAT	☐	■	■	☐	☐
HW/STEAM	☐	☐	☐	☐	☐
ELECTRIC	☐	☐	☐	☐	☐
HEAT PUMP	☐	☐	☐	☐	☐
FLR/WALL	☐	☐	☐	☐	☐
STVE/SPCE	☐	☐	☐	☐	☐
GEOTHERMAL	☐	☐	☐	☐	☐
OUTSIDE	☐	☐	☐	☐	☐
CTRL A/C	☐	■	■	☐	☐

PLUMBING					BASE ■
X FULL BATH					
X HALF BATH		1			
X FIXTURES			1		

FLOOR	AREA	CONST	VALUE
1	1296	BRK	201,740
.25	314	BRK	44,580
BSMT	962		13,760
SUBTOTAL			260,080
MULTI-FAMILY #		0	0
BUILDING TYPE		100%	0
BSMT FINISH		0 S.F.	0
FIREPLACE #		1	4,400
HEATING		0 S.F.	0
AIR COND		1,610 S.F.	2,660
PLUMBING #		3	3,630
GARAGES & CARPORTS			7,800
EXTRA FEATURES			1,900
SUBTOTAL			280,470
GRADE FACTOR			115 %
UNADJUSTED VALUE			322,540
FACTOR			100 %

SKETCH

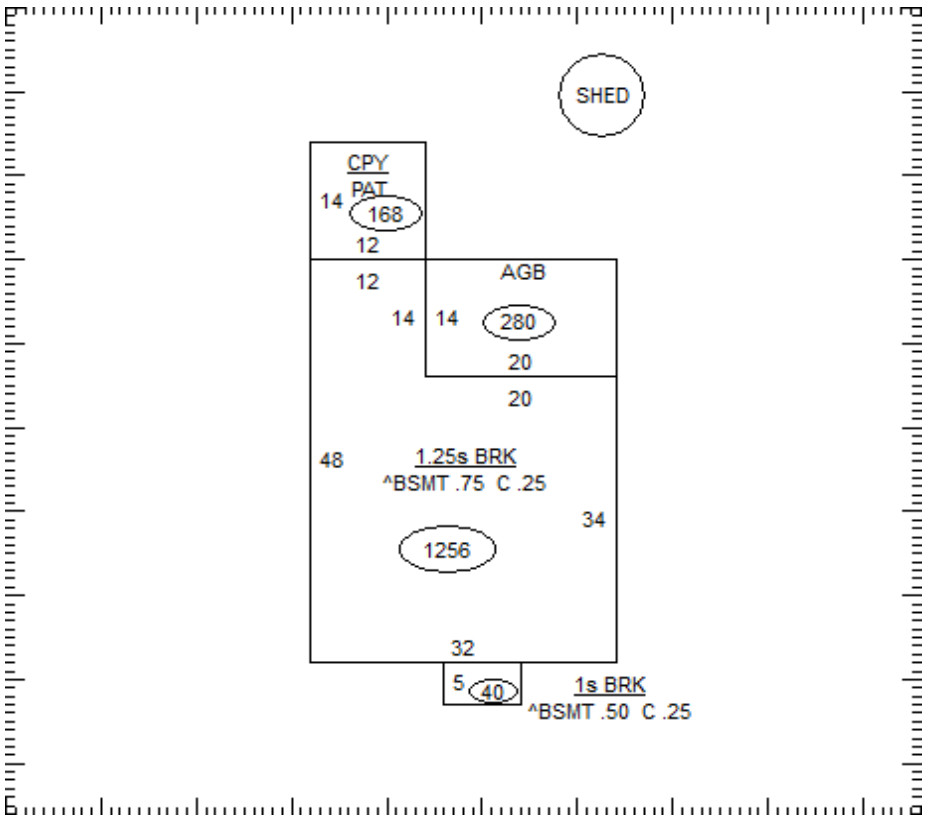

OCCUPANCY	ST.HT	SIZE	AREA	GRADE	PRICE	AGE	REMD	CND	UNADJ VAL	PHYS	PHYS VAL	FUNC	TRUE VAL
DWELLING	1.25	SK	1,610	B-		1938		A	322,540	40	193,520		197,400
1 Shed		6x6	36	C		2000		A		37			0
2													
3													
4													
5													
6													
7													
8													
9													
10													
11													
											TOTAL		197,400

05-066000.0000

COMMENTS

Dwelling has an Economic Factor of 102%