05-026900.0000

KOCH KEVIN A & KATHY J
KOCH KEVIN A & KATHY J
0 S SIXTH ST
COLDWATER, OH 45828

BUTLER TWP-COLDWATER CORP / COLDWATER SD
08-34-129-006

LEGAL INFORMATION
OUT LOT 26 S PT

Property Class: 510
Neighborhood 000503-TM50
Map: 14D4
Block:
Card: 42
Bk: Pg:

	OWNERSHIP	ADDRESS	CITY	STATE	ZIP	DATE	AMOUNT	DEED:CONV#	JS	VALID
1	KOCH KEVIN A & KATHY J	0 S SIXTH ST	COLDWATER	OH	45828	03/04/2016	100,000	2:WDC : 120	☐	■
2	WESTGERDES ANGELA KAY	221 SIXTH ST	COLDWATER	OH	45828	04/23/2004	79,900	WDC : A-M : 0	☐	☐
3	POST CHRISTOPHER D &	221 S SIXTH ST	COLDWATER	OH	45828	08/04/1989	42,500	: A-M : 0	☐	☐

X: ☐ TTO LISTER: NS DATE: 02/10/2005 TIME: 12:00:00 AM ☐ LETTER ■ LETTER REC'D GIS CODE

STREET/ROAD	TOPOGRAPHY	PU-UTILITIES-PR	NEIGHBORHOOD	INFLUENCE FACTORS	
■ PAVED	■ LEVEL	☐ WATER ☐	☐ IMPROVING	☐ A. NO ROAD	☐ F. RESTRICT
☐ GRAVEL	☐ HIGH	☐ SEWER ☐	■ STATIC	☐ B. TOPGRHY	☐ G. WOOD LT
☐ DIRT	☐ LOW	☐ GAS ☐	☐ DECLINING	☐ C. Ex Front	☐ H. VACANCY
■ SIDEWALKS	☐ ROLLING	☐ ELECTRIC ☐	☐ OLD	☐ D. QUANTITY	☐ I. WATER FRONT
☐ CURBS	☐ STANDARD	■ STANDARD	☐ STANDARD	☐ E. SZ/SHAPE	☐ J. OTHER/CDU

PROPERTY LOCATION
221 S SIXTH ST, COLDWATER

COMMENT
TY2022:Net Gen=$1,483.76, Other Assessment=$0.00
DE16 DESKTOP REVIEW CHG: cor pat msmnts

LAND COMPUTATIONS

LAND TYPE	SIZE	M RATE C	INF	M VALUE C
F:Front	F45 D113	ST395 DP86 ADJ340		15,300 0
			TOTAL	15,300 0

VALUATION SUMMARY

VALUE YEAR		2023	2020	2017					
REASON FOR CHANGE		RAPP	RAPP	RAPP					
APPRAISED VALUE	LAND	15,300	9,600	7,700					
	IMPR	134,900	105,800	93,600					
	TOTAL	150,200	115,400	101,300					
ASSESSED VALUE	LAND	5,360	3,360	2,700					
	IMPR	47,220	37,030	32,760					
	TOTAL	52,580	40,390	35,460					

OCCUPANCY	EXTERIOR
■ SF ☐ DU ☐ TR	☐ WOOD
☐ CONVERSION	☐ STUCCO
BUILDING TYPE	■ ALM/VYNL
☐ MOBILE HOME	☐ CONC BLK
☐ BI/TR LEVEL	☐ METAL
☐ MOD/MAN	☐ BRICK
☐ _____	☐ STONE

ROOFING	ROOF TYPE
☐ METAL	■ GABLE
☐ SLT/TLE	☐ HIP
■ SHINGLES	☐ GAMBREL
☐ SHAKES	☐ MANSARD
☐ COMPOSITE	☐ FLAT

FLOORS	B	1	2	3	U
CONCRETE	■	☐	☐	☐	☐
WOOD	☐	☐	☐	☐	☐
TILE/COMPO	☐	■	☐	☐	☐
CARPET	☐	■	■	☐	☐

INT. FINISH	B	1	2	3	U
PLASTER/DW	☐	■	■	☐	☐
PANELING	☐	☐	☐	☐	☐
UNFINISHED	☐	☐	☐	☐	☐

ACCOMMODATIONS					
# OF ROOMS		7	3		
BEDROOMS		1	3		
FIREPLACES					

HEAT & AC	B	1	2	3	U
NO HEAT	☐	☐	☐	☐	☐
CTRL HEAT	☐	■	■	☐	☐
HW/STEAM	☐	☐	☐	☐	☐
ELECTRIC	☐	☐	☐	☐	☐
HEAT PUMP	☐	☐	☐	☐	☐
FLR/WALL	☐	☐	☐	☐	☐
STVE/SPCE	☐	☐	☐	☐	☐
GEOTHERMAL	☐	☐	☐	☐	☐
OUTSIDE	☐	☐	☐	☐	☐
CTRL A/C	☐	■	■	☐	☐

PLUMBING					BASE ■
X FULL BATH					
X HALF BATH		1			
X FIXTURES					

FLOOR	AREA	CONST	VALUE
1	1182	FR	178,090
.5	372	FR	34,760
BSMT	186		2,660

SUBTOTAL		215,510
MULTI-FAMILY #	0	0
BUILDING TYPE	100%	0
BSMT FINISH	0 S.F.	0
FIREPLACE #	0	0
HEATING	0 S.F.	0
AIR COND	1,554 S.F.	2,560
PLUMBING #	2	2,420
GARAGES & CARPORTS		0
EXTRA FEATURES		7,600
SUBTOTAL		228,090
GRADE FACTOR		105 %
UNADJUSTED VALUE		239,490
FACTOR		100 %

SKETCH

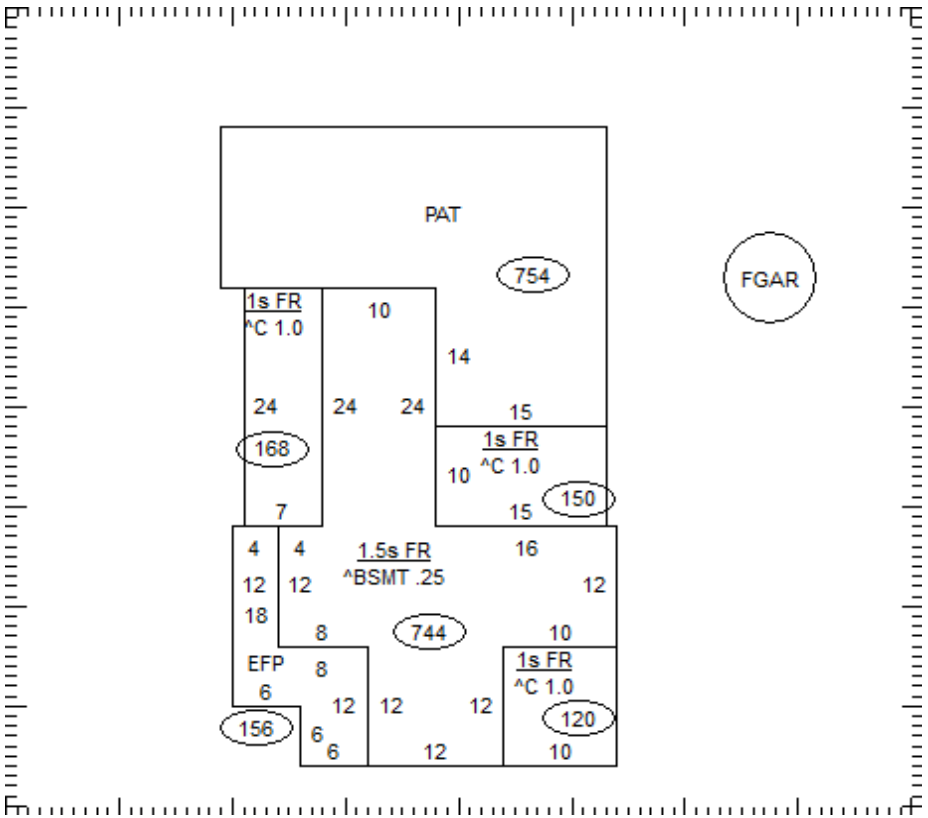

OCCUPANCY	ST.HT	SIZE	AREA	GRADE	PRICE	AGE	REMD	CND	UNADJ VAL	PHYS	PHYS VAL	FUNC	TRUE VAL
DWELLING	1.5	SK	1,554	C+		1903		A	239,490	45	131,720		134,400
1 Gar - Frame		12x22	264	D	18.96	1961		A	5,010	90	500		500
2													
3													
4													
5													
6													
7													
8													
9													
10													
11													
											TOTAL		134,900

05-026900.0000

COMMENTS

VYNL SDNG
Dwelling has an Economic Factor of 102%