03-041800.0000

BUTLER TWP / COLDWATER SD

08-35-300-005

Property Class: 510

Neighborhood 000340-RS50

Map: 18
Block:
Card: 12
Bk: Pg:

STEINBRUNNER MARK R & NICOLE E
STEINBRUNNER MARK R & NICOLE E
4180 FLEETFOOT RD
COLDWATER, OH 45828

LEGAL INFORMATION
KUNKS SUBDIVISION
ALSO SEC LAND TO EAST
RTS: 002-06-35 LOT#: 4

	OWNERSHIP	ADDRESS	CITY	STATE	ZIP	DATE	AMOUNT	DEED:CONV#	JS	VALID
1	STEINBRUNNER MARK R &	4180 FLEETFOOT RD	COLDWATER	OH	45828	07/31/2019	225,000	WDC : 514	☐	■
2	GIERE LARRY E & KIMBERLY A	4180 FLEETFOOT RD	COLDWATER	OH	45828	01/13/1998	140,000	: A : 0	☐	■
3							0	0	☐	☐

X: ■ TTO LISTER: TK DATE: 06/26/2023 TIME: 12:00:00 AM ☐ LETTER ☐ LETTER REC'D GIS CODE

STREET/ROAD	TOPOGRAPHY	PU-UTILITIES-PR	NEIGHBORHOOD	INFLUENCE FACTORS	
■ PAVED	■ LEVEL	☐ WATER ☐	☐ IMPROVING	☐ A. NO ROAD	☐ F. RESTRICT
☐ GRAVEL	☐ HIGH	☐ SEWER ☐	■ STATIC	☐ B. TOPGRHY	☐ G. WOOD LT
☐ DIRT	☐ LOW	☐ GAS ☐	☐ DECLINING	☐ C. Ex Front	☐ H. VACANCY
☐ SIDEWALKS	☐ ROLLING	☐ ELECTRIC ☐	☐ OLD	☐ D. QUANTITY	☐ I. WATER FRONT
☐ CURBS	☐ STANDARD	■ STANDARD	☐ STANDARD	☐ E. SZ/SHAPE	☐ J. OTHER/CDU

PROPERTY LOCATION
4180 FLEETFOOT RD, COLDWATER

COMMENT
TY2022:Net Gen=$2,477.84, Other Assessment=$0.00
DE16 COR AC SQ FTG
DE17 DESKTOP RVW CHG: COR PAT MSNTS
DE22 ADD FULL BATH, RMV GAS FP
DE23 TTO; CHG OMP TO 1ST/BRK, ADD OFP

LAND COMPUTATIONS

LAND TYPE	SIZE	M RATE C	INF	M VALUE C
F:Front	F120 D220	ST215 DP115 ADJ247		29,600 0
			TOTAL	29,600 0

VALUATION SUMMARY

VALUE YEAR		2023	2022	2020	2017	2017			
REASON FOR CHANGE		NC	MISC	RAPP	RAPP	MISC			
APPRAISED VALUE	LAND	29,600	23,100	23,100	17,300	17,300			
	IMPR	227,100	169,600	170,300	150,400	142,900			
	TOTAL	256,700	192,700	193,400	167,700	160,200			
ASSESSED VALUE	LAND	10,360	8,090	8,090	6,060	6,060			
	IMPR	79,490	59,360	59,610	52,640	50,020			
	TOTAL	89,850	67,450	67,700	58,700	56,080			

OCCUPANCY	EXTERIOR
■ SF ☐ DU ☐ TR	☐ WOOD
☐ CONVERSION	☐ STUCCO
BUILDING TYPE	☐ ALM/VYNL
☐ MOBILE HOME	☐ CONC BLK
☐ BI/TR LEVEL	☐ METAL
☐ MOD/MAN	■ BRICK
☐ _____	☐ STONE

ROOFING	ROOF TYPE
☐ METAL	■ GABLE
☐ SLT/TLE	☐ HIP
■ SHINGLES	☐ GAMBREL
☐ SHAKES	☐ MANSARD
☐ COMPOSITE	☐ FLAT

FLOORS	B	1	2	3	U
CONCRETE	■	☐	☐	☐	☐
WOOD	☐	☐	☐	☐	☐
TILE/COMPO	☐	■	☐	☐	☐
CARPET	■	■	☐	☐	☐

INT. FINISH	B	1	2	3	U
PLASTER/DW	■	■	☐	☐	☐
PANELING	☐	☐	☐	☐	☐
UNFINISHED	■	☐	☐	☐	☐

ACCOMMODATIONS					
# OF ROOMS		5			
BEDROOMS		3			
FIREPLACES					

HEAT & AC	B	1	2	3	U
NO HEAT	☐	☐	☐	☐	☐
CTRL HEAT	■	■	☐	☐	☐
HW/STEAM	☐	☐	☐	☐	☐
ELECTRIC	☐	☐	☐	☐	☐
HEAT PUMP	☐	☐	☐	☐	☐
FLR/WALL	☐	☐	☐	☐	☐
STVE/SPCE	☐	☐	☐	☐	☐
GEOTHERMAL	☐	☐	☐	☐	☐
OUTSIDE	☐	☐	☐	☐	☐
CTRL A/C	■	■	☐	☐	☐

PLUMBING					BASE ■
X FULL BATH		1			
X HALF BATH					
X FIXTURES					

FLOOR	AREA	CONST	VALUE
1	1850	BRK	239,240
BSMT	1446		20,680
SUBTOTAL			259,920
MULTI-FAMILY #	0		0
BUILDING TYPE	100%		0
BSMT FINISH	723 S.F.		10,340
FIREPLACE #	0		0
HEATING	0 S.F.		0
AIR COND	2,573 S.F.		4,240
PLUMBING #	3		3,630
GARAGES & CARPORTS			18,900
EXTRA FEATURES			3,300
SUBTOTAL			300,330
GRADE FACTOR			105 %
UNADJUSTED VALUE			315,350
FACTOR			100 %

SKETCH

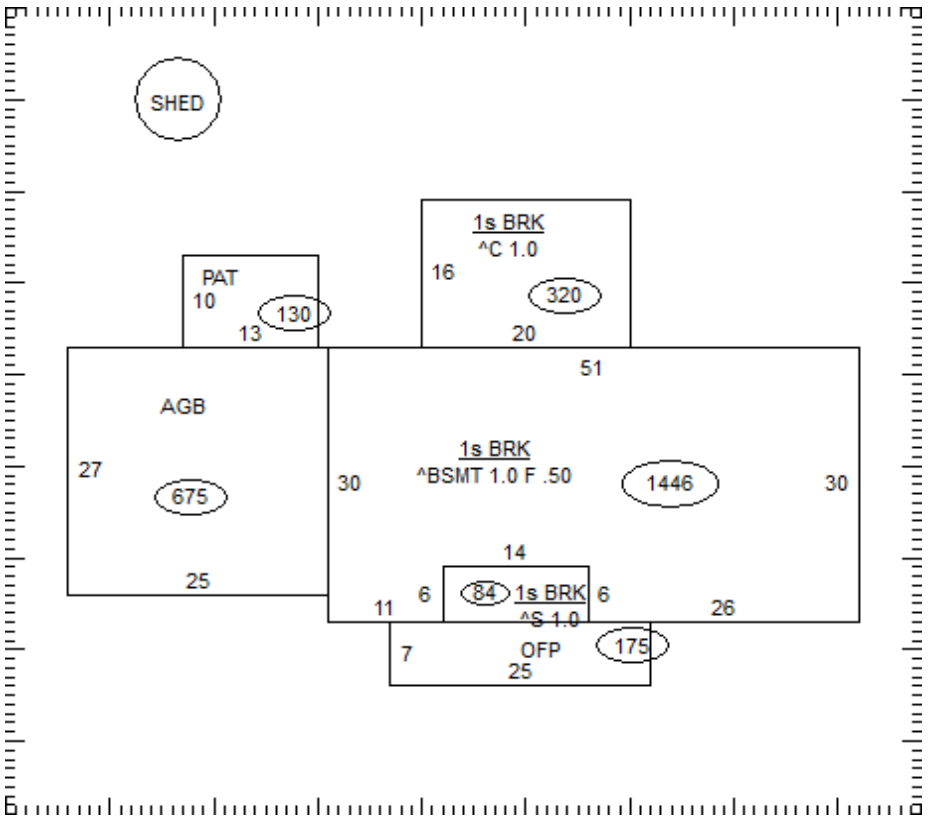

OCCUPANCY	ST.HT	SIZE	AREA	GRADE	PRICE	AGE	REMD	CND	UNADJ VAL	PHYS	PHYS VAL	FUNC	TRUE VAL
DWELLING	1	SK	1,850	C+		1987		A	315,350	28	227,050		227,100
1 Shed	IRR	0x0	141	C		2013		A		15			0
2													
3													
4													
5													
6													
7													
8													
9													
10													
11													
											TOTAL		227,100

03-041800.0000

COMMENTS

Dwelling has an Economic Factor of 100%