03-027800.0000

BORGER DALE J & VIVIAN T
BORGER DALE J & VIVIAN T
3257 SLAVIK RD
COLDWATER, OH 45828

BUTLER TWP / COLDWATER SD

08-30-100-016

LEGAL INFORMATION
PT SE NW

RTS: 002-06-30
Acres:1.0000

Property Class: 510
Neighborhood 009035-R150
Map: 16
Block:
Card: 46
Bk: Pg:

	OWNERSHIP	ADDRESS	CITY	STATE	ZIP	DATE	AMOUNT	DEED:CONV#	JS	VALID
1	BORGER DALE J & VIVIAN T	3257 SLAVIK RD	COLDWATER	OH	45828	06/24/1988	59,000	: A : 0	☐	■
2							0	0	☐	☐
3							0	0	☐	☐

X: ☐ TTO LISTER: EE DATE: 04/20/2005 TIME: 12:00:00 AM ☐ LETTER ■ LETTER REC'D GIS CODE

STREET/ROAD	TOPOGRAPHY	PU-UTILITIES-PR	NEIGHBORHOOD	INFLUENCE FACTORS	
■ PAVED	■ LEVEL	☐ WATER ☐	☐ IMPROVING	☐ A. NO ROAD	☐ F. RESTRICT
☐ GRAVEL	☐ HIGH	☐ SEWER ☐	☐ STATIC	☐ B. TOPGRHY	☐ G. WOOD LT
☐ DIRT	☐ LOW	☐ GAS ☐	☐ DECLINING	☐ C. Ex Front	☐ H. VACANCY
☐ SIDEWALKS	☐ ROLLING	☐ ELECTRIC ☐	☐ OLD	☐ D. QUANTITY	☐ I. WATER FRONT
☐ CURBS	☐ STANDARD	■ STANDARD	☐ STANDARD	☐ E. SZ/SHAPE	☐ J. OTHER/CDU

PROPERTY LOCATION
3257 SLAVIK RD, COLDWATER

COMMENT
TY2022:Net Gen=$2,454.64, Other Assessment=$2.64
DE15 TT MUHLENKAMP & ASSOC/ PRIMARY RES IN FLORIDA SINCE 2014/RMV 2.5%

LAND COMPUTATIONS

LAND TYPE	SIZE	M RATE C	INF	M VALUE C
HS:Home Site	AC:1	32050		32,100 0
Total Acres: 1.0000			TOTAL	32,100 0

VALUATION SUMMARY

		2023	2020	2017					
VALUE YEAR		2023	2020	2017					
REASON FOR CHANGE		RAPP	RAPP	RAPP					
APPRAISED VALUE	LAND	32,100	17,700	16,500					
	IMPR	224,300	168,600	155,100					
	TOTAL	256,400	186,300	171,600					
ASSESSED VALUE	LAND	11,240	6,200	5,780					
	IMPR	78,510	59,010	54,290					
	TOTAL	89,750	65,210	60,070					

OCCUPANCY	EXTERIOR
■SF ☐DU ☐TR	☐ WOOD
☐CONVERSION	☐ STUCCO
BUILDING TYPE	■ ALM/VYNL
☐ MOBILE HOME	☐ CONC BLK
☐ BI/TR LEVEL	☐ METAL
☐ MOD/MAN	☐ BRICK
☐ _____	☐ STONE

ROOFING	ROOF TYPE
☐ METAL	■ GABLE
☐ SLT/TLE	☐ HIP
■ SHINGLES	☐ GAMBREL
☐ SHAKES	☐ MANSARD
☐ COMPOSITE	☐ FLAT

FLOORS	B	1	2	3	U
CONCRETE	■	☐	☐	☐	☐
WOOD	☐	☐	☐	☐	☐
TILE/COMPO	☐	■	☐	☐	☐
CARPET	☐	■	☐	☐	☐

INT. FINISH	B	1	2	3	U
PLASTER/DW	☐	■	☐	☐	☐
PANELING	☐	☐	☐	☐	☐
UNFINISHED	☐	☐	☐	☐	☐

ACCOMMODATIONS					
# OF ROOMS		8			
BEDROOMS		3			
FIREPLACES		1			

HEAT & AC	B	1	2	3	U
NO HEAT	☐	☐	☐	☐	☐
CTRL HEAT	☐	■	☐	☐	☐
HW/STEAM	☐	☐	☐	☐	☐
ELECTRIC	☐	■	☐	☐	☐
HEAT PUMP	☐	☐	☐	☐	☐
FLR/WALL	☐	☐	☐	☐	☐
STVE/SPCE	☐	☐	☐	☐	☐
GEOTHERMAL	☐	☐	☐	☐	☐
OUTSIDE	☐	☐	☐	☐	☐
CTRL A/C	☐	☐	☐	☐	☐

PLUMBING	BASE ■			
X FULL BATH		1		
X HALF BATH				
X FIXTURES		1		

FLOOR	AREA	CONST	VALUE
1	2460	FR	268,020
BSMT	720		10,300
SUBTOTAL			278,320
MULTI-FAMILY #		0	0
BUILDING TYPE		100%	0
BSMT FINISH		0 S.F.	0
FIREPLACE #		1	4,400
HEATING		0 S.F.	0
AIR COND		0 S.F.	0
PLUMBING #		4	4,840
GARAGES & CARPORTS			14,200
EXTRA FEATURES			900
SUBTOTAL			302,660
GRADE FACTOR			95 %
UNADJUSTED VALUE			287,530
FACTOR			100 %

SKETCH

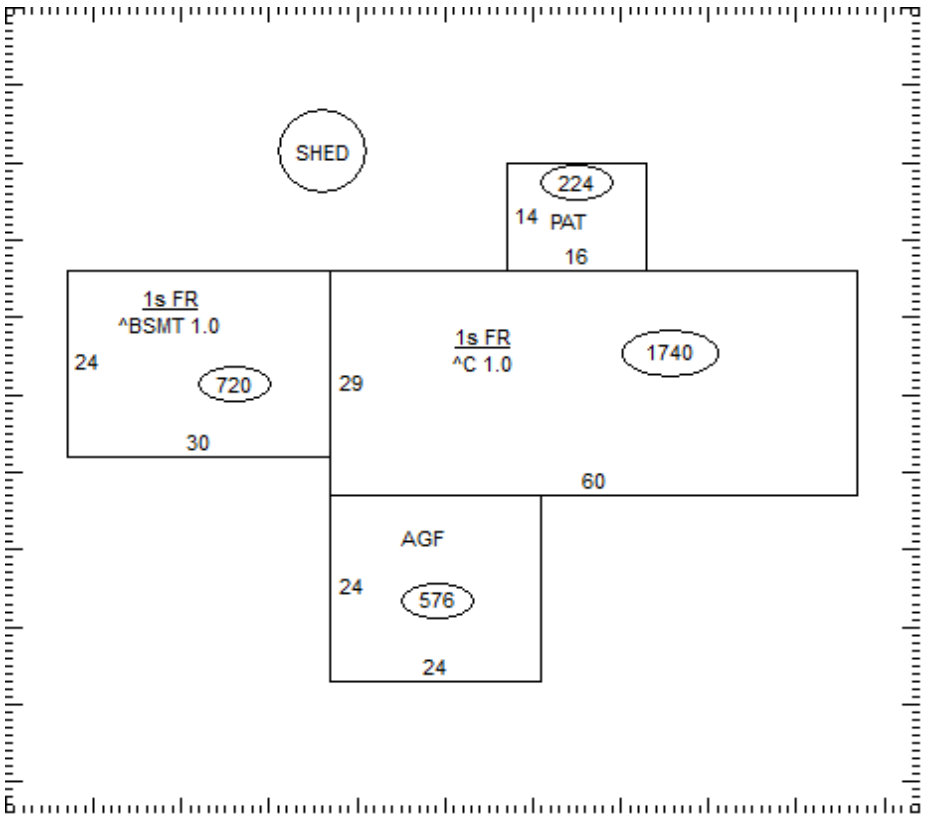

OCCUPANCY	ST.HT	SIZE	AREA	GRADE	PRICE	AGE	REMD	CND	UNADJ VAL	PHYS	PHYS VAL	FUNC	TRUE VAL
DWELLING	1	SK	2,460	C-		1973		A	287,530	35	186,890		224,300
1 Shed	10	9x12	108	B		1991		A		53			0
2													
3													
4													
5													
6													
7													
8													
9													
10													
11													
											TOTAL		224,300

03-027800.0000

COMMENTS

Dwelling has an Economic Factor of 120%