02-009200.0000

SCHWIETERMAN TRAVIS
SCHWIETERMAN TRAVIS
5330 US RTE 127
CELINA, OH 45822

BUTLER TWP / CELINA SD

08-24-277-005

LEGAL INFORMATION
OLIGER ALLOTMENT

RTS: 002-06-24 LOT#: 5

Property Class: 510
Neighborhood 000205-RS50
Map: 11
Block:
Card: 29
Bk: Pg:

	OWNERSHIP	ADDRESS	CITY	STATE	ZIP	DATE	AMOUNT	DEED:CONV#	JS	VALID
1	SCHWIETERMAN TRAVIS	5330 US RTE 127	CELINA	OH	45822	04/15/2019	116,500	WDC : 235	☐	■
2	PORTZ JOSEPH M & DEBRA A	5330 US RT 127	CELINA	OH	45822	05/15/1990	62,500	: A : 0	☐	■
3							0	0	☐	☐

X: ☐ TTO LISTER: JO DATE: 04/06/2005 TIME: 12:00:00 AM ☐ LETTER ■ LETTER REC'D GIS CODE

STREET/ROAD	TOPOGRAPHY	PU-UTILITIES-PR	NEIGHBORHOOD	INFLUENCE FACTORS	
■ PAVED	■ LEVEL	☐ WATER ☐	☐ IMPROVING	☐ A. NO ROAD	☐ F. RESTRICT
☐ GRAVEL	☐ HIGH	☐ SEWER ☐	■ STATIC	☐ B. TOPGRHY	☐ G. WOOD LT
☐ DIRT	☐ LOW	☐ GAS ☐	☐ DECLINING	☐ C. Ex Front	☐ H. VACANCY
☐ SIDEWALKS	☐ ROLLING	☐ ELECTRIC ☐	☐ OLD	☐ D. QUANTITY	☐ I. WATER FRONT
☐ CURBS	☐ STANDARD	■ STANDARD	☐ STANDARD	☐ E. SZ/SHAPE	☐ J. OTHER/CDU

PROPERTY LOCATION
5330 US RT 127, CELINA

COMMENT
TY2022:Net Gen=$1,934.52, Other Assessment=$0.00
DE17 DESKTOP RVW CHG: WDDK TO OFP
DE20 RMV OWN OCC; DIDN'T RET APP

LAND COMPUTATIONS

LAND TYPE	SIZE	M RATE C	INF	M VALUE C
HS:Home Site <1 @ 24560*0.65	AC:0.37	15960		16,000 0
Total Acres: .3700			TOTAL	16,000 0

VALUATION SUMMARY

VALUE YEAR		2023	2020	2017	2017				
REASON FOR CHANGE		RAPP	RAPP	RAPP	MISC				
APPRAISED VALUE	LAND	16,000	11,300	10,700	9,800				
	IMPR	165,400	105,900	88,200	78,700				
	TOTAL	181,400	117,200	98,900	88,500				
ASSESSED VALUE	LAND	5,600	3,960	3,750	3,430				
	IMPR	57,890	37,070	30,870	27,550				
	TOTAL	63,490	41,030	34,620	30,980				

OCCUPANCY	EXTERIOR
■SF ☐DU ☐TR	☐ WOOD
☐CONVERSION	☐ STUCCO
BUILDING TYPE	■ ALM/VYNL
☐ MOBILE HOME	☐ CONC BLK
☐ BI/TR LEVEL	☐ METAL
☐ MOD/MAN	☐ BRICK
☐ _____	☐ STONE

ROOFING	ROOF TYPE
☐ METAL	■ GABLE
☐ SLT/TLE	☐ HIP
■ SHINGLES	☐ GAMBREL
☐ SHAKES	☐ MANSARD
☐ COMPOSITE	☐ FLAT

FLOORS	B	1	2	3	U
CONCRETE	☐	☐	☐	☐	☐
WOOD	☐	☐	☐	☐	☐
TILE/COMPO	☐	■	☐	☐	☐
CARPET	☐	■	☐	☐	☐

INT. FINISH	B	1	2	3	U
PLASTER/DW	☐	■	☐	☐	☐
PANELING	☐	☐	☐	☐	☐
UNFINISHED	☐	☐	☐	☐	☐

ACCOMMODATIONS					
# OF ROOMS		6			
BEDROOMS		2			
FIREPLACES					

HEAT & AC	B	1	2	3	U
NO HEAT	☐	☐	☐	☐	☐
CTRL HEAT	☐	■	☐	☐	☐
HW/STEAM	☐	☐	☐	☐	☐
ELECTRIC	☐	☐	☐	☐	☐
HEAT PUMP	☐	☐	☐	☐	☐
FLR/WALL	☐	☐	☐	☐	☐
STVE/SPCE	☐	☐	☐	☐	☐
GEOTHERMAL	☐	☐	☐	☐	☐
OUTSIDE	☐	☐	☐	☐	☐
CTRL A/C	☐	■	☐	☐	☐

PLUMBING	BASE ■				
X FULL BATH					
X HALF BATH		1			
X FIXTURES					

FLOOR	AREA	CONST	VALUE
1	1495	FR	203,080

SUBTOTAL			203,080
MULTI-FAMILY #	0		0
BUILDING TYPE	100%		0
BSMT FINISH	0	S.F.	0
FIREPLACE #	0		0
HEATING	0	S.F.	0
AIR COND	1,495	S.F.	2,470
PLUMBING #	2		2,420
GARAGES & CARPORTS			7,300
EXTRA FEATURES			4,700
SUBTOTAL			219,970
GRADE FACTOR			100 %
UNADJUSTED VALUE			219,970
FACTOR			100 %

SKETCH

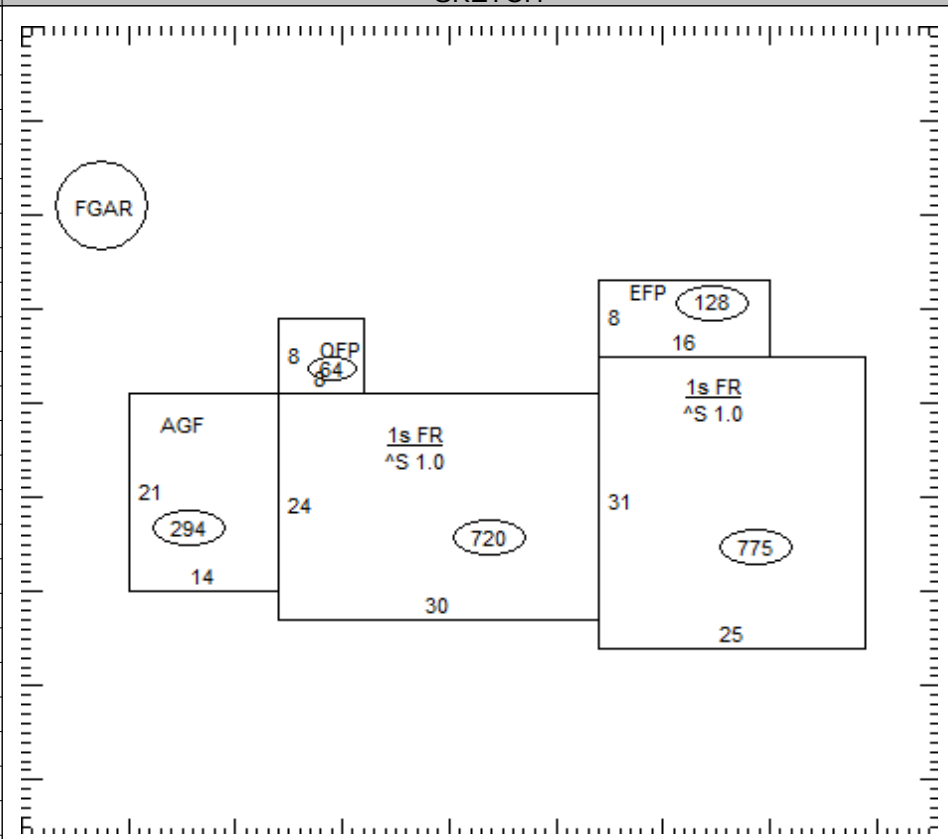

OCCUPANCY	ST.HT	SIZE	AREA	GRADE	PRICE	AGE	REMD	CND	UNADJ VAL	PHYS	PHYS VAL	FUNC	TRUE VAL
DWELLING	1	SK	1,495	C		1950	1992	A	219,970	30	153,980		161,700
1 Gar - Frame	7	18x20	360	C	23.70	1988		A	8,530	57	3,670		3,700
2													
3													
4													
5													
6													
7													
8													
9													
10													
11													
											TOTAL		165,400

02-009200.0000

COMMENTS

Dwelling has an Economic Factor of 105%