02-000300.0400

ASHMAN RODNEY D & JULIA M
ASHMAN RODNEY D & JULIA M
5581 JOHNSTON RD
CELINA, OH 45822

BUTLER TWP / CELINA SD

08-13-400-022

LEGAL INFORMATION
WATERS EDGE

LOT#: 4

Property Class: 510
Neighborhood 000215-RS50
Map: 01
Block:
Card: 10
Bk: Pg:

	OWNERSHIP	ADDRESS	CITY	STATE	ZIP	DATE	AMOUNT	DEED:CONV#	JS	VALID
1	ASHMAN RODNEY D & JULIA M	5581 JOHNSTON RD	CELINA	OH	45822	10/29/2019	192,500	WDC : 738	☐	■
2	CARPENTER RONALD E	5581 JOHNSTON RD	CELINA	OH	45822	04/08/2016	0	QCE : X : 0	☐	☐
3	CARPENTER RONALD E &	5581 JOHNSTON RD	CELINA	OH	45822	04/10/2015	155,000	WDC : 212	☐	■

X: ☐ TTO LISTER: JO DATE: 03/10/2005 TIME: 12:00:00 AM ☐ LETTER ■ LETTER REC'D GIS CODE

STREET/ROAD	TOPOGRAPHY	PU-UTILITIES-PR	NEIGHBORHOOD	INFLUENCE FACTORS	
■ PAVED	■ LEVEL	☐ WATER ☐	☐ IMPROVING	☐ A. NO ROAD	☐ F. RESTRICT
☐ GRAVEL	☐ HIGH	☐ SEWER ☐	■ STATIC	☐ B. TOPGRHY	☐ G. WOOD LT
☐ DIRT	☐ LOW	☐ GAS ☐	☐ DECLINING	☐ C. Ex Front	☐ H. VACANCY
☐ SIDEWALKS	☐ ROLLING	☐ ELECTRIC ☐	☐ OLD	☐ D. QUANTITY	☐ I. WATER FRONT
☐ CURBS	☐ STANDARD	■ STANDARD	☐ STANDARD	☐ E. SZ/SHAPE	☐ J. OTHER/CDU

PROPERTY LOCATION
5581 JOHNSTON RD

COMMENT
TY2022:Net Gen=$2,929.66, Other Assessment=$0.00
DE17 DESKTOP RVW CHG: CHG WDDK TO PAT
DE17 RMV OWN OCC/DIDN'T RET APP
DE21 ADD OWN OCC
DE22 RMV PAT, ADD OFP; DESKTOP RVW

LAND COMPUTATIONS

LAND TYPE	SIZE	M RATE C	INF	M VALUE C
F:Front	F120 D155	ST240 DP102 ADJ245		29,400 0
			TOTAL	29,400 0

VALUATION SUMMARY

VALUE YEAR		2023	2023	2020	2017	2017			
REASON FOR CHANGE		RAPP	NC	RAPP	RAPP	MISC			
APPRAISED VALUE	LAND	29,400	20,400	20,400	15,400	15,400			
	IMPR	212,400	166,800	159,300	142,000	148,000			
	TOTAL	241,800	187,200	179,700	157,400	163,400			
ASSESSED VALUE	LAND	10,290	7,140	7,140	5,390	5,390			
	IMPR	74,340	58,380	55,760	49,700	51,800			
	TOTAL	84,630	65,520	62,900	55,090	57,190			

OCCUPANCY	EXTERIOR
☐SF ■DU ☐TR	■ WOOD
☐CONVERSION	☐ STUCCO
BUILDING TYPE	■ ALM/VYNL
☐ MOBILE HOME	☐ CONC BLK
☐ BI/TR LEVEL	☐ METAL
☐ MOD/MAN	☐ BRICK
☐ _____	☐ STONE

ROOFING	ROOF TYPE
☐ METAL	■ GABLE
☐ SLT/TLE	☐ HIP
■ SHINGLES	☐ GAMBREL
☐ SHAKES	☐ MANSARD
☐ COMPOSITE	☐ FLAT

FLOORS	B	1	2	3	U
CONCRETE	■	☐	☐	☐	☐
WOOD	☐	☐	☐	☐	☐
TILE/COMPO	☐	■	☐	☐	☐
CARPET	☐	■	☐	☐	☐

INT. FINISH	B	1	2	3	U
PLASTER/DW	☐	■	☐	☐	☐
PANELING	☐	☐	☐	☐	☐
UNFINISHED	■	☐	☐	☐	☐

ACCOMMODATIONS					
# OF ROOMS		7			
BEDROOMS		3			
FIREPLACES					

HEAT & AC	B	1	2	3	U
NO HEAT	☐	☐	☐	☐	☐
CTRL HEAT	■	■	☐	☐	☐
HW/STEAM	☐	☐	☐	☐	☐
ELECTRIC	☐	☐	☐	☐	☐
HEAT PUMP	☐	☐	☐	☐	☐
FLR/WALL	☐	☐	☐	☐	☐
STVE/SPCE	☐	☐	☐	☐	☐
GEOTHERMAL	☐	☐	☐	☐	☐
OUTSIDE	☐	☐	☐	☐	☐
CTRL A/C	■	■	☐	☐	☐

PLUMBING					BASE ■
X FULL BATH		1			
X HALF BATH					
X FIXTURES		1			

FLOOR	AREA	CONST	VALUE
1	1456	FR	197,780
BSMT	1456		20,820
SUBTOTAL			218,600
MULTI-FAMILY #	1		2,500
BUILDING TYPE	100%		0
BSMT FINISH	144 S.F.		2,060
FIREPLACE #	0		0
HEATING	0 S.F.		0
AIR COND	1,600 S.F.		2,640
PLUMBING #	4		4,840
GARAGES & CARPORTS			16,600
EXTRA FEATURES			12,100
SUBTOTAL			259,340
GRADE FACTOR			105 %
UNADJUSTED VALUE			272,310
FACTOR			100 %

SKETCH

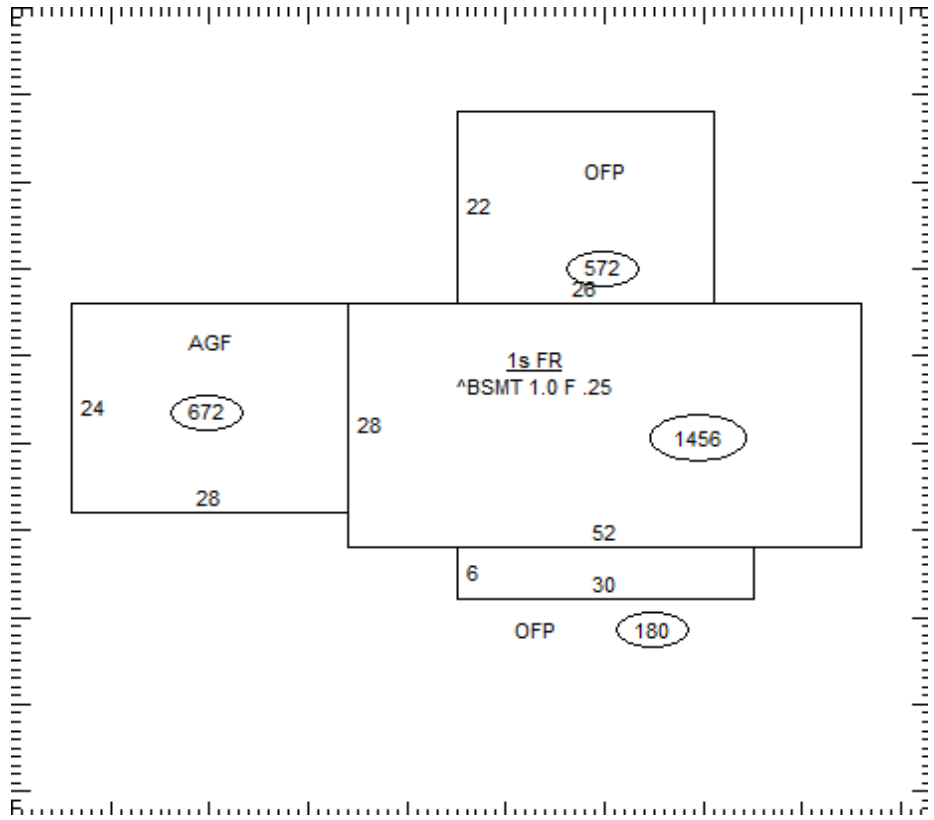

OCCUPANCY	ST.HT	SIZE	AREA	GRADE	PRICE	AGE	REMD	CND	UNADJ VAL	PHYS	PHYS VAL	FUNC	TRUE VAL
DWELLING	1	SK	1,456	C+		2001		A	272,310	22	212,400		212,400
1													
2													
3													
4													
5													
6													
7													
8													
9													
10													
11													
											TOTAL		212,400

02-000300.0400

COMMENTS

60 L/F OF BRICK-3' HIGH
Dwelling has an Economic Factor of 100% (Rollback Basis=$135,600)

02-000300.0400

ASHMAN RODNEY D & JULIA M
ASHMAN RODNEY D & JULIA M
5581 JOHNSTON RD
CELINA, OH 45822

BUTLER TWP / CELINA SD

08-13-400-022

LEGAL INFORMATION
WATERS EDGE

LOT#: 4

Property Class: 510
Neighborhood 000215-RS50
Map: 01
Block:
Card: 10
Bk: Pg:

	OWNERSHIP	ADDRESS	CITY	STATE	ZIP	DATE	AMOUNT	DEED:CONV#	JS	VALID
1	DAVIS MICHAEL & TIFFANY	5581 JOHNSTON RD	CELINA	OH	45822	02/27/2002	151,300	: A : 0	☐	■
2							0	0	☐	☐
3							0	0	☐	☐

X: ☐ TTO LISTER: JO DATE: 03/10/2005 TIME: 12:00:00 AM ☐ LETTER ■ LETTER REC'D GIS CODE

STREET/ROAD	TOPOGRAPHY	PU-UTILITIES-PR	NEIGHBORHOOD	INFLUENCE FACTORS	
■ PAVED	■ LEVEL	☐ WATER ☐	☐ IMPROVING	☐ A. NO ROAD	☐ F. RESTRICT
☐ GRAVEL	☐ HIGH	☐ SEWER ☐	■ STATIC	☐ B. TOPGRHY	☐ G. WOOD LT
☐ DIRT	☐ LOW	☐ GAS ☐	☐ DECLINING	☐ C. Ex Front	☐ H. VACANCY
☐ SIDEWALKS	☐ ROLLING	☐ ELECTRIC ☐	☐ OLD	☐ D. QUANTITY	☐ I. WATER FRONT
☐ CURBS	☐ STANDARD	■ STANDARD	☐ STANDARD	☐ E. SZ/SHAPE	☐ J. OTHER/CDU

PROPERTY LOCATION
5581 JOHNSTON RD

COMMENT

LAND COMPUTATIONS

LAND TYPE	SIZE	M RATE C	INF	M VALUE C
			TOTAL	29,400 0

VALUATION SUMMARY

VALUE YEAR									
REASON FOR CHANGE									
APPRAISED VALUE	LAND								
	IMPR								
	TOTAL								
ASSESSED VALUE	LAND								
	IMPR								
	TOTAL								

OCCUPANCY	EXTERIOR
☐SF ☐DU ☐TR	☐ WOOD
☐CONVERSION	☐ STUCCO
BUILDING TYPE	☐ ALM/VYNL
☐ MOBILE HOME	☐ CONC BLK
☐ BI/TR LEVEL	☐ METAL
☐ MOD/MAN	☐ BRICK
☐ _____	☐ STONE

ROOFING	ROOF TYPE
☐ METAL	☐ GABLE
☐ SLT/TLE	☐ HIP
☐ SHINGLES	☐ GAMBREL
☐ SHAKES	☐ MANSARD
☐ COMPOSITE	☐ FLAT

FLOORS	B	1	2	3	U
CONCRETE	☐	☐	☐	☐	☐
WOOD	☐	☐	☐	☐	☐
TILE/COMPO	☐	☐	☐	☐	☐
CARPET	☐	☐	☐	☐	☐

INT. FINISH	B	1	2	3	U
PLASTER/DW	☐	☐	☐	☐	☐
PANELING	☐	☐	☐	☐	☐
UNFINISHED	☐	☐	☐	☐	☐

ACCOMMODATIONS					
# OF ROOMS					
BEDROOMS					
FIREPLACES					

HEAT & AC	B	1	2	3	U
NO HEAT	☐	☐	☐	☐	☐
CTRL HEAT	☐	☐	☐	☐	☐
HW/STEAM	☐	☐	☐	☐	☐
ELECTRIC	☐	☐	☐	☐	☐
HEAT PUMP	☐	☐	☐	☐	☐
FLR/WALL	☐	☐	☐	☐	☐
STVE/SPCE	☐	☐	☐	☐	☐
GEOTHERMAL	☐	☐	☐	☐	☐
OUTSIDE	☐	☐	☐	☐	☐
CTRL A/C	☐	☐	☐	☐	☐

PLUMBING	BASE ☐				
X FULL BATH					
X HALF BATH					
X FIXTURES					

FLOOR	AREA	CONST	VALUE

SUBTOTAL		0
MULTI-FAMILY #	0	0
BUILDING TYPE	000%	0
BSMT FINISH	0 S.F.	0
FIREPLACE #	0	0
HEATING	0 S.F.	0
AIR COND	0 S.F.	0
PLUMBING #	0	0
GARAGES & CARPORTS		0
EXTRA FEATURES		0
SUBTOTAL		0
GRADE FACTOR		%
UNADJUSTED VALUE		0
FACTOR		%

SKETCH

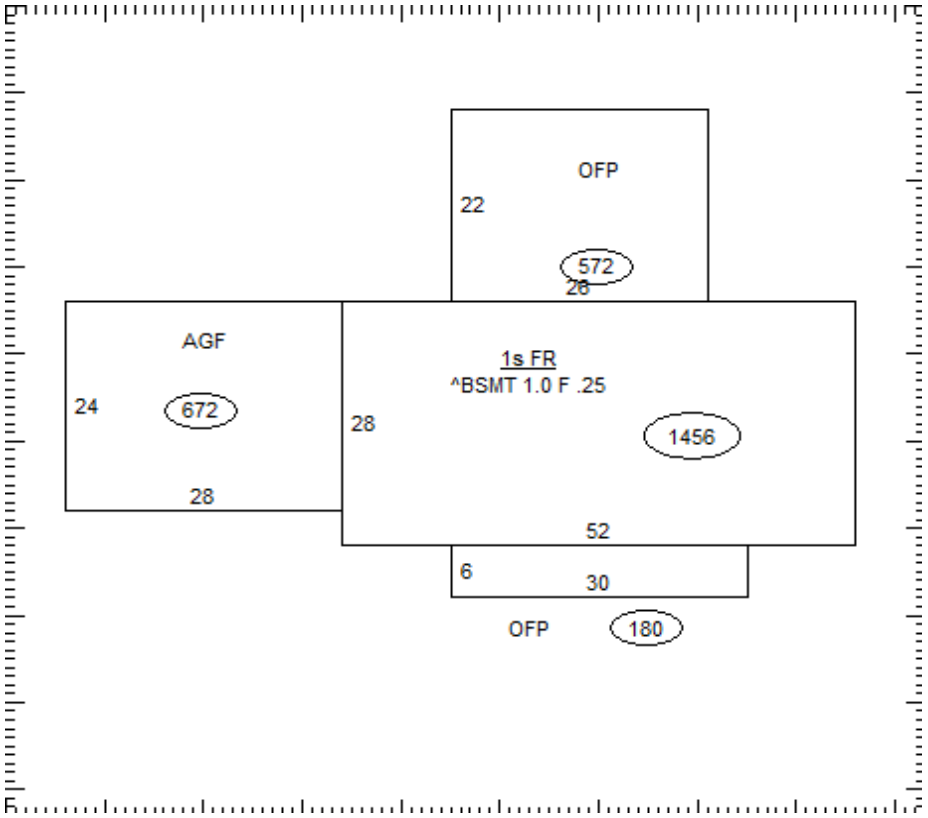

OCCUPANCY	ST.HT	SIZE	AREA	GRADE	PRICE	AGE	REMD	CND	UNADJ VAL	PHYS	PHYS VAL	FUNC	TRUE VAL
DWELLING		SK											
1													
2													
3													
4													
5													
6													
7													
8													
9													
10													
11													
												TOTAL	0

02-000300.0400

COMMENTS