41-037700.0000

SMITH JON VINCENT
SMITH JON VINCENT
205 JON ST
MENDON, OH 45862

UNION TWP-MENDON CORP / PARKWAY SD
03-28-202-005

LEGAL INFORMATION
RAUCH SECOND ADDITION
ALSO E SD LOT 7
LOT#: 8

Property Class: 510
Neighborhood
004102-TM20
Map:
Block:
Card: 120
Bk: Pg:

	OWNERSHIP	ADDRESS	CITY	STATE	ZIP	DATE	AMOUNT	DEED:CONV#	JS	VALID
1	SMITH JON VINCENT	205 JON ST	MENDON	OH	45862	10/18/2021	125,000	WDC : 889	☐	■
2	CLAY DENNIS C & CLAY	5526 FAST RD	CELINA	OH	45822	01/24/2008	0	QCE : X : 0	☐	☐
3	CLAY MARY LOU	205 JON ST PO BOX 99	MENDON	OH	45862 -0099	09/29/1989	0	: X : 0	☐	☐

X: ☐ TTO LISTER: DA DATE: 10/25/2004 TIME: 04:14:38 PM ■ LETTER ☐ LETTER REC'D GIS CODE

STREET/ROAD	TOPOGRAPHY	PU-UTILITIES-PR	NEIGHBORHOOD	INFLUENCE FACTORS	
■ PAVED	■ LEVEL	☐ WATER ☐	☐ IMPROVING	☐ A. NO ROAD	☐ F. RESTRICT
☐ GRAVEL	☐ HIGH	☐ SEWER ☐	■ STATIC	☐ B. TOPGRHY	☐ G. WOOD LT
☐ DIRT	☐ LOW	☐ GAS ☐	☐ DECLINING	☐ C. Ex Front	☐ H. VACANCY
☐ SIDEWALKS	☐ ROLLING	☐ ELECTRIC ☐	☐ OLD	☐ D. QUANTITY	☐ I. WATER FRONT
☐ CURBS	☐ STANDARD	■ STANDARD	☐ STANDARD	☐ E. SZ/SHAPE	☐ J. OTHER/CDU

PROPERTY LOCATION
205 JON ST, MENDON

COMMENT
DE16 ADDED LOTS TOGETHER//HSE SITS ON BOTH LOTS
DE21 ADD GAS FP PER DATA MAILER
DE22 RMV OWN OCC - DID NOT RETURN APP
TriDwell=112 TriOB=112 TriLand=112
(Mod ST:)120

LAND COMPUTATIONS

LAND TYPE	SIZE	M RATE C	INF	M VALUE C
F:Front	F124 D127	ST120 DP92 ADJ110		15,200 0
			TOTAL	15,200 0

VALUATION SUMMARY

VALUE YEAR		2021	2020	2017	2016	2014	2011		
REASON FOR CHANGE		NC	RAPP	RAPP	MISC	RAPP	RAPP		
APPRAISED VALUE	LAND	15,200	15,200	11,400	11,400	7,500	7,500		
	IMPR	86,100	83,500	71,200	73,200	73,200	73,200		
	TOTAL	101,300	98,700	82,600	84,600	80,700	80,700		
ASSESSED VALUE	LAND	5,320	5,320	3,990	3,990	2,630	2,630		
	IMPR	30,140	29,230	24,920	25,620	25,620	25,620		
	TOTAL	35,460	34,550	28,910	29,610	28,250	28,250		

OCCUPANCY	EXTERIOR
■ SF ☐ DU ☐ TR	☐ WOOD
☐ CONVERSION	☐ STUCCO
BUILDING TYPE	☐ ALM/VYNL
☐ MOBILE HOME	☐ CONC BLK
☐ BI/TR LEVEL	☐ METAL
☐ MOD/MAN	■ BRICK
☐ _____	☐ STONE
ROOFING	**ROOF TYPE**
☐ METAL	☐ GABLE
☐ SLT/TLE	■ HIP
■ SHINGLES	☐ GAMBREL
☐ SHAKES	☐ MANSARD
☐ COMPOSITE	☐ FLAT

FLOORS	B	1	2	3	U
CONCRETE	☐	☐	☐	☐	☐
WOOD	☐	■	☐	☐	☐
TILE/COMPO	☐	☐	☐	☐	☐
CARPET	☐	■	☐	☐	☐

INT. FINISH	B	1	2	3	U
PLASTER/DW	☐	■	☐	☐	☐
PANELING	☐	☐	☐	☐	☐
UNFINISHED	☐	☐	☐	☐	☐

ACCOMMODATIONS					
# OF ROOMS		5			
BEDROOMS		2			
FIREPLACES		1			

HEAT & AC	B	1	2	3	U
NO HEAT	☐	☐	☐	☐	☐
CTRL HEAT	☐	■	☐	☐	☐
HW/STEAM	☐	☐	☐	☐	☐
ELECTRIC	☐	☐	☐	☐	☐
HEAT PUMP	☐	☐	☐	☐	☐
FLR/WALL	☐	☐	☐	☐	☐
STVE/SPCE	☐	☐	☐	☐	☐
GEOTHERMAL	☐	☐	☐	☐	☐
OUTSIDE	☐	☐	☐	☐	☐
CTRL A/C	☐	☐	☐	☐	☐

PLUMBING	BASE ■				
X FULL BATH					
X HALF BATH					
X FIXTURES					

FLOOR	AREA	CONST	VALUE
1	1292	BRK	116,150

SUBTOTAL		116,150
MULTI-FAMILY #	0	0
BUILDING TYPE	100%	0
BSMT FINISH	0 S.F.	0
FIREPLACE #	1	4,000
HEATING	0 S.F.	0
AIR COND	0 S.F.	0
PLUMBING #	0	0
GARAGES & CARPORTS		12,200
EXTRA FEATURES		2,000
SUBTOTAL		134,350
GRADE FACTOR		110 %
UNADJUSTED VALUE		165,520
FACTOR		100 %

SKETCH

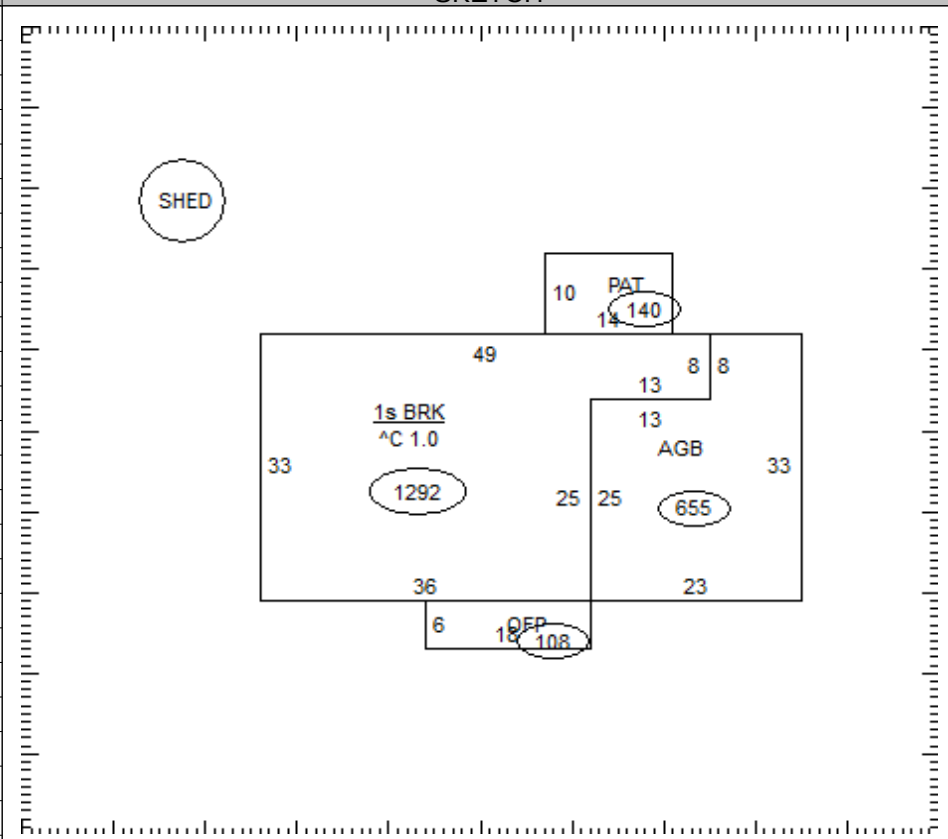

OCCUPANCY	ST.HT	SIZE	AREA	GRADE	PRICE	AGE	REMD	CND	UNADJ VAL	PHYS	PHYS VAL	FUNC	TRUE VAL
DWELLING	1	SK	1,292	C+		1970		A	165,520	35	107,590		86,100
1 Shed	PP	8x10	80	C		2000		A		35			0
2													
3													
4													
5													
6													
7													
8													
9													
10													
11													
											TOTAL		86,100

41-037700.0000

COMMENTS

Dwelling has an Economic Factor of 80%