23-046700.0000

STEINBRUNNER MATTHEW J & NICOLE A
STEINBRUNNER MATTHEW J & NICOLE A
412 E KREMER HOYING RD
SAINT HENRY, OH 45883

GRANVILLE TWP-ST HENRY CORP / ST HENRY SD
11-21-203-010

LEGAL INFORMATION
OLD PLAT

LOT#: 86

Property Class: 510
Neighborhood
002302-TM50
Map: 04B2
Block:
Card: 11
Bk: Pg:

	OWNERSHIP	ADDRESS	CITY	STATE	ZIP	DATE	AMOUNT	DEED:CONV#	JS	VALID
1	STEINBRUNNER MATTHEW J &	412 E KREMER HOYING RD	SAINT HENRY	OH	45883	09/14/2022	290,000	WDC : 649	☐	■
2	NIEKAMP MICHAEL J	412 E KREMER HOYING RD	SAINT HENRY	OH	45883	11/28/2011	126,000	WDC : E : 640	☐	☐
3	STAMMEN LOUISE ANN	412 KREMER HOYING RD	ST HENRY	OH	45883 -0349		0	: 0	☐	☐

X: ☐ TTO LISTER: DF DATE: 02/28/2005 TIME: 12:00:00 AM ☐ LETTER ■ LETTER REC'D GIS CODE

STREET/ROAD	TOPOGRAPHY	PU-UTILITIES-PR	NEIGHBORHOOD	INFLUENCE FACTORS
■ PAVED	■ LEVEL	☐ WATER ☐	☐ IMPROVING	☐ A. NO ROAD ☐ F. RESTRICT
☐ GRAVEL	☐ HIGH	☐ SEWER ☐	☐ STATIC	☐ B. TOPGRHY ☐ G. WOOD LT
☐ DIRT	☐ LOW	☐ GAS ☐	☐ DECLINING	☐ C. Ex Front ☐ H. VACANCY
☐ SIDEWALKS	☐ ROLLING	☐ ELECTRIC ☐	☐ OLD	☐ D. QUANTITY ☐ I. WATER FRONT
☐ CURBS	☐ STANDARD	■ STANDARD	☐ STANDARD	☐ E. SZ/SHAPE ☐ J. OTHER/CDU

PROPERTY LOCATION
412 E KREMER HOYING RD, ST HENRY

COMMENT
TY2021:Net Gen=$2,583.78, Other Assessment=$0.00
DE11 CORRECTED SKETCH
DE16 DESK TOP REVIEW//CORR PATIO SIZE; ADD RFX
TriDwell=118 TriOB=118 TriLand=118

LAND COMPUTATIONS

LAND TYPE	SIZE	M RATE C	INF	M VALUE C
F:Front	F110 D760	ST260 DP130 ADJ338		43,900 0
			TOTAL	43,900 0

VALUATION SUMMARY

VALUE YEAR		2020	2017	2016	2014	2011			
REASON FOR CHANGE		RAPP	RAPP	MISC	RAPP	RAPP			
APPRAISED VALUE	LAND	43,900	37,200	37,200	37,200	31,500			
	IMPR	149,900	118,700	105,500	104,700	88,800			
	TOTAL	193,800	155,900	142,700	141,900	120,300			
ASSESSED VALUE	LAND	15,370	13,020	13,020	13,020	11,030			
	IMPR	52,470	41,550	36,930	36,650	31,080			
	TOTAL	67,840	54,570	49,950	49,670	42,110			

OCCUPANCY	EXTERIOR
■SF ☐DU ☐TR	☐ WOOD
☐CONVERSION	☐ STUCCO
BUILDING TYPE	■ ALM/VYNL
☐ MOBILE HOME	☐ CONC BLK
☐ BI/TR LEVEL	☐ METAL
☐ MOD/MAN	☐ BRICK
☐ _____	☐ STONE

ROOFING	ROOF TYPE
☐ METAL	■ GABLE
☐ SLT/TLE	☐ HIP
■ SHINGLES	☐ GAMBREL
☐ SHAKES	☐ MANSARD
☐ COMPOSITE	☐ FLAT

FLOORS	B	1	2	3	U
CONCRETE	■	☐	☐	☐	☐
WOOD	☐	☐	☐	☐	☐
TILE/COMPO	☐	■	☐	☐	☐
CARPET	☐	■	■	☐	☐

INT. FINISH	B	1	2	3	U
PLASTER/DW	☐	■	■	☐	☐
PANELING	☐	■	☐	☐	☐
UNFINISHED	■	☐	☐	☐	☐

ACCOMMODATIONS					
# OF ROOMS	2	5	2		
BEDROOMS		2	2		
FIREPLACES		1			

HEAT & AC	B	1	2	3	U
NO HEAT	☐	☐	☐	☐	☐
CTRL HEAT	☐	■	■	☐	☐
HW/STEAM	☐	■	■	☐	☐
ELECTRIC	☐	☐	☐	☐	☐
HEAT PUMP	☐	☐	☐	☐	☐
FLR/WALL	☐	☐	☐	☐	☐
STVE/SPCE	☐	☐	☐	☐	☐
GEOTHERMAL	☐	☐	☐	☐	☐
OUTSIDE	☐	☐	☐	☐	☐
CTRL A/C	☐	■	■	☐	☐

PLUMBING			BASE ■		
X FULL BATH			1		
X HALF BATH	1				
X FIXTURES		1	1		

FLOOR	AREA	CONST	VALUE
1	1732	FR	126,570
.25	221	FR	13,040
BSMT	884		11,490
SUBTOTAL			151,100
MULTI-FAMILY #	0		0
BUILDING TYPE	100%		0
BSMT FINISH	0 S.F.		0
FIREPLACE #	1		4,000
HEATING	0 S.F.		0
AIR COND	1,953 S.F.		2,930
PLUMBING #	7		7,700
GARAGES & CARPORTS			7,400
EXTRA FEATURES			2,700
SUBTOTAL			175,830
GRADE FACTOR			107 %
UNADJUSTED VALUE			222,000
FACTOR			100 %

SKETCH

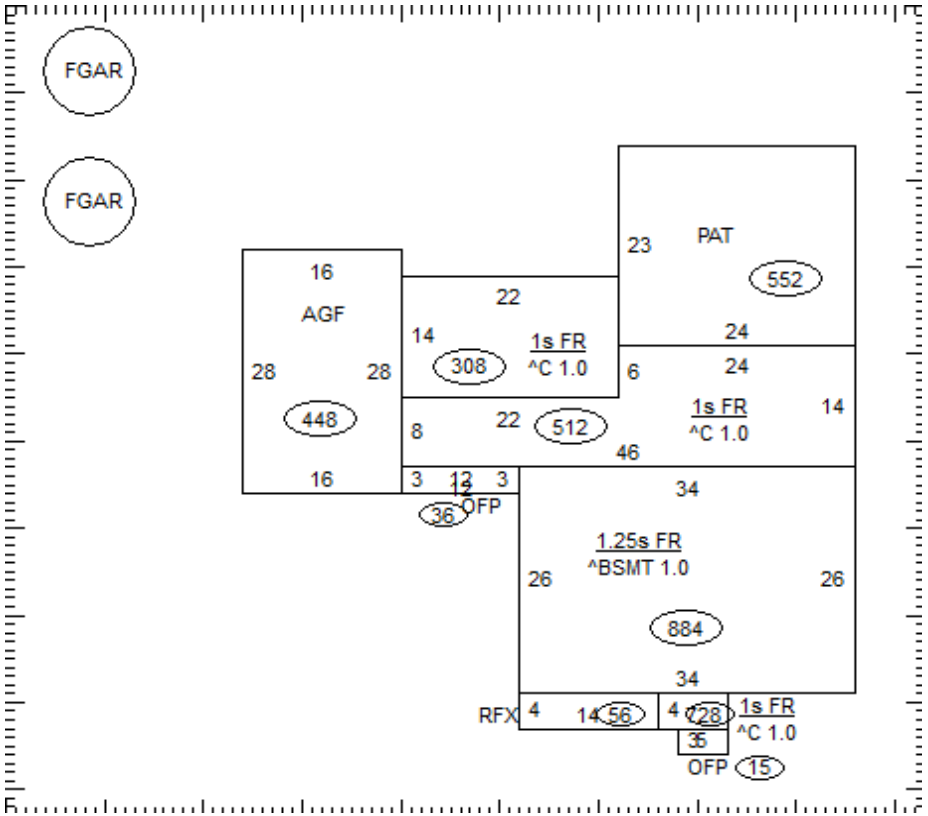

OCCUPANCY	ST.HT	SIZE	AREA	GRADE	PRICE	AGE	REMD	CND	UNADJ VAL	PHYS	PHYS VAL	FUNC	TRUE VAL
DWELLING	1.25	SK	1,953	C		1951		A	222,000	42	128,760		148,100
1 Gar - Frame		20x20	400	C	16.91	1951		A	7,980	90	800		800
2 Gar - Frame		20x24	480	C	16.91	1951		A	9,580	90	960		1,000
3													
4													
5													
6													
7													
8													
9													
10													
11													

23-046700.0000

TOTAL 149,900

COMMENTS

Dwelling has an Economic Factor of 115% (Rollback Basis=$192,000)