05-035700.0000

LEFELD RYAN D & MARY K
LEFELD RYAN D & MARY K
203 S FIRST ST
COLDWATER, OH 45828

BUTLER TWP-COLDWATER CORP / COLDWATER SD
08-33-234-001

LEGAL INFORMATION
OLD PLAT
& 2' OF LOT 27
LOT#: 28

Property Class: 510
Neighborhood
000505-TM50
Map: 14C1
Block:
Card: 37
Bk: Pg:

	OWNERSHIP	ADDRESS	CITY	STATE	ZIP	DATE	AMOUNT	DEED:CONV#	JS	VALID
1	LEFELD RYAN D & MARY K	203 S FIRST ST	COLDWATER	OH	45828	03/31/2021	274,800	WDC : 223	☐	■
2	THOBE GERY & CARLA C	203 S FIRST ST	COLDWATER	OH	45828	08/16/1994	115,000	: A : 0	☐	☐
3							0	0	☐	☐

X: ☐ TTO LISTER: NS DATE: 02/03/2005 TIME: 12:00:00 AM ☐ LETTER ■ LETTER REC'D GIS CODE

STREET/ROAD	TOPOGRAPHY	PU-UTILITIES-PR	NEIGHBORHOOD	INFLUENCE FACTORS	
■ PAVED	■ LEVEL	☐ WATER ☐	☐ IMPROVING	☐ A. NO ROAD	☐ F. RESTRICT
☐ GRAVEL	☐ HIGH	☐ SEWER ☐	■ STATIC	☐ B. TOPGRHY	☐ G. WOOD LT
☐ DIRT	☐ LOW	☐ GAS ☐	☐ DECLINING	■ C. Ex Front	☐ H. VACANCY
■ SIDEWALKS	☐ ROLLING	☐ ELECTRIC ☐	☐ OLD	☐ D. QUANTITY	☐ I. WATER FRONT
☐ CURBS	☐ STANDARD	■ STANDARD	☐ STANDARD	☐ E. SZ/SHAPE	☐ J. OTHER/CDU

PROPERTY LOCATION
203 S FIRST ST, COLDWATER

COMMENT
DE16 DESKTOP REVIEW CHG: add pat
DE22 RMV OWN OCC - DID NOT RETURN APP
TriDwell=112 TriOB=112 TriLand=112
(Mod ST:)115

LAND COMPUTATIONS

LAND TYPE	SIZE	M RATE C	INF	M VALUE C
F:Front	F132 D61	ST230 DP64 ADJ147	C:0.05	20,600 0
			TOTAL	20,600 0

VALUATION SUMMARY

VALUE YEAR		2021	2020	2017	2016	2014	2011		
REASON FOR CHANGE		MISC	RAPP	RAPP	MISC	RAPP	RAPP		
APPRAISED VALUE	LAND	20,600	20,100	15,600	16,400	16,400	15,600		
	IMPR	143,700	143,700	122,500	110,500	109,900	104,600		
	TOTAL	164,300	163,800	138,100	126,900	126,300	120,200		
ASSESSED VALUE	LAND	7,210	7,040	5,460	5,740	5,740	5,460		
	IMPR	50,300	50,300	42,880	38,680	38,470	36,610		
	TOTAL	57,510	57,340	48,340	44,420	44,210	42,070		

OCCUPANCY	EXTERIOR
■ SF ☐ DU ☐ TR	☐ WOOD
☐ CONVERSION	☐ STUCCO
BUILDING TYPE	☐ ALM/VYNL
☐ MOBILE HOME	☐ CONC BLK
☐ BI/TR LEVEL	☐ METAL
☐ MOD/MAN	■ BRICK
☐ _____	☐ STONE

ROOFING	ROOF TYPE
☐ METAL	☐ GABLE
☐ SLT/TLE	■ HIP
■ SHINGLES	☐ GAMBREL
☐ SHAKES	☐ MANSARD
☐ COMPOSITE	☐ FLAT

FLOORS	B	1	2	3	U
CONCRETE	■	☐	☐	☐	☐
WOOD	☐	■	■	☐	☐
TILE/COMPO	☐	☐	☐	☐	☐
CARPET	☐	■	☐	☐	☐

INT. FINISH	B	1	2	3	U
PLASTER/DW	☐	■	■	☐	☐
PANELING	☐	☐	☐	☐	☐
UNFINISHED	☐	☐	☐	☐	☐

ACCOMMODATIONS					
# OF ROOMS	2	4	3		
BEDROOMS			3		
FIREPLACES		1			

HEAT & AC	B	1	2	3	U
NO HEAT	☐	☐	☐	☐	☐
CTRL HEAT	■	■	■	☐	☐
HW/STEAM	☐	☐	☐	☐	☐
ELECTRIC	☐	☐	☐	☐	☐
HEAT PUMP	☐	☐	☐	☐	☐
FLR/WALL	☐	☐	☐	☐	☐
STVE/SPCE	☐	☐	☐	☐	☐
GEOTHERMAL	☐	☐	☐	☐	☐
OUTSIDE	☐	☐	☐	☐	☐
CTRL A/C	■	■	■	☐	☐

PLUMBING			BASE ■		
X FULL BATH			1		
X HALF BATH		1			
X FIXTURES					

FLOOR	AREA	CONST	VALUE
1	1036	BRK	101,520
2ND	1036	BRK	48,730
BSMT	1036		13,470

SUBTOTAL		163,720
MULTI-FAMILY #	0	0
BUILDING TYPE	100%	0
BSMT FINISH	518 S.F.	6,730
FIREPLACE #	1	4,000
HEATING	0 S.F.	0
AIR COND	2,590 S.F.	3,880
PLUMBING #	5	5,500
GARAGES & CARPORTS		5,100
EXTRA FEATURES		7,500
SUBTOTAL		196,430
GRADE FACTOR		110 %
UNADJUSTED VALUE		242,000
FACTOR		100 %

SKETCH

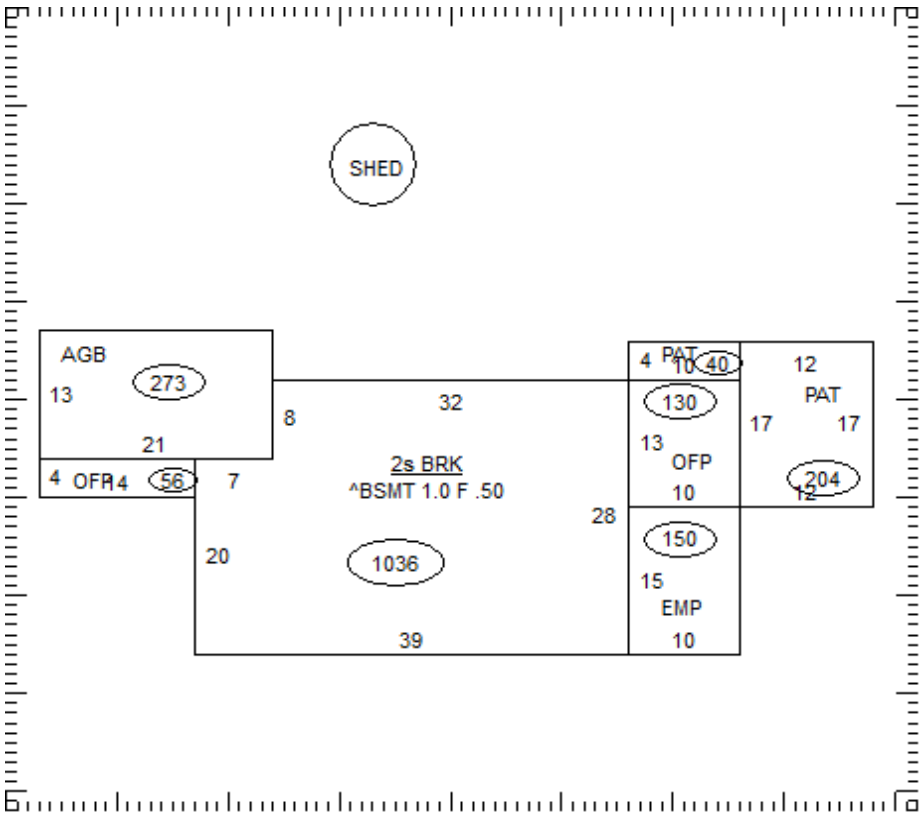

OCCUPANCY	ST.HT	SIZE	AREA	GRADE	PRICE	AGE	REMD	CND	UNADJ VAL	PHYS	PHYS VAL	FUNC	TRUE VAL
DWELLING	2	SK	2,072	C+		1940		A	242,000	45	133,100		143,700
1 Shed	PP	12x12	144	C		1990		A		47			0
2													
3													
4													
5													
6													
7													
8													
9													
10													
11													
											TOTAL		143,700

05-035700.0000

COMMENTS

Dwelling has an Economic Factor of 108%