38-015500.0200

RECOVERY TWP / FT RECOVERY SD

10-15-200-006

Property Class: 510

Neighborhood 009385-R150

Map:
Block:
Card:

Bk: Pg:

WILSON SYDNEY M & WESTGERDES ROBERT R

WILSON SYDNEY M & WESTGERDES ROBERT R
1837 ST JOE RD
FORT RECOVERY, OH 45846
Created in 2010 From 38-015500.0000 due to Split

LEGAL INFORMATION

PT NW NE

RTS: 012-07-15
Acres:2.0470

	OWNERSHIP	ADDRESS	CITY	STATE	ZIP	DATE	AMOUNT	DEED:CONV#	JS	VALID
1	WILSON SYDNEY M &	1837 ST JOE RD	FORT RECOVERY	OH	45846	10/22/2020	125,000	WDC : 791	☐	■
2	LEFEVRE THOMAS H & LISA M	2945 BURRVILLE RD	FORT RECOVERY	OH	45846	03/31/2020	1,185,000	2:WDC : 193	☐	■
3	SCHLARMAN JASON H &	1837 ST JOE RD	FORT RECOVERY	OH	45846	04/30/2010	0	QCE : X : 0	☐	☐

X: ☐ TTO LISTER: HK DATE: 05/04/2021 TIME: 12:00:00 AM ■ LETTER ☐ LETTER REC'D GIS CODE

STREET/ROAD	TOPOGRAPHY	PU-UTILITIES-PR	NEIGHBORHOOD	INFLUENCE FACTORS
☐ PAVED	☐ LEVEL	☐ WATER ☐	☐ IMPROVING	☐ A. NO ROAD ☐ F. RESTRICT
☐ GRAVEL	☐ HIGH	☐ SEWER ☐	☐ STATIC	☐ B. TOPGRHY ☐ G. WOOD LT
☐ DIRT	☐ LOW	☐ GAS ☐	☐ DECLINING	☐ C. Ex Front ☐ H. VACANCY
☐ SIDEWALKS	☐ ROLLING	☐ ELECTRIC ☐	☐ OLD	☐ D. QUANTITY ☐ I. WATER FRONT
☐ CURBS	☐ STANDARD	☐ STANDARD	☐ STANDARD	☐ E. SZ/SHAPE ☐ J. OTHER/CDU

PROPERTY LOCATION

1837 ST JOE RD,

COMMENT

TY2020:Net Gen=$1,708.20, Other Assessment=$0.30
DE17 DESKTOP REVIEW//MOVED DWELLING FROM 38-015500.0000
DE21 DWLG GUTTED; RMDL IN PROCESS
NC22 CHK FOR COMPL
TriDwell=119 TriOB=119 TriLand=119

LAND COMPUTATIONS

LAND TYPE	SIZE	M RATE C	INF	M VALUE C
HS:Home Site	AC:1	16500		19,600 0
SM:Small Acreage	AC:1.047	6800		8,500 0
Total Acres: 2.0470			TOTAL	28,100 0

VALUATION SUMMARY

VALUE YEAR		2021	2020	2017	2017	2017	2014	2011	2011
REASON FOR CHANGE		NC	RAPP	RAPP	MISC	MISC	RAPP	RAPP	MISC
APPRAISED VALUE	LAND	28,100	28,100	23,600	24,300	24,300	24,300	22,100	22,300
	IMPR	133,100	124,000	95,200	79,900	79,900	0	0	0
	TOTAL	161,200	152,100	118,800	104,200	104,200	24,300	22,100	22,300
ASSESSED VALUE	LAND	9,840	9,840	8,260	8,510	8,510	8,510	7,740	7,810
	IMPR	46,590	43,400	33,320	27,970	27,970	0	0	0
	TOTAL	56,430	53,240	41,580	36,480	36,480	8,510	7,740	7,810

OCCUPANCY	EXTERIOR
■SF ☐DU ☐TR	☐ WOOD
☐CONVERSION	☐ STUCCO
BUILDING TYPE	■ ALM/VYNL
☐ MOBILE HOME	☐ CONC BLK
☐ BI/TR LEVEL	☐ METAL
☐ MOD/MAN	☐ BRICK
☐ _____	☐ STONE

ROOFING	ROOF TYPE
☐ METAL	■ GABLE
☐ SLT/TLE	☐ HIP
■ SHINGLES	☐ GAMBREL
☐ SHAKES	☐ MANSARD
☐ COMPOSITE	☐ FLAT

FLOORS	B	1	2	3	U
CONCRETE	■	☐	☐	☐	☐
WOOD	☐	■	■	☐	☐
TILE/COMPO	☐	☐	☐	☐	☐
CARPET	☐	■	■	☐	☐

INT. FINISH	B	1	2	3	U
PLASTER/DW	☐	■	■	☐	☐
PANELING	☐	☐	☐	☐	☐
UNFINISHED	■	☐	☐	☐	☐

ACCOMMODATIONS					
# OF ROOMS		4	3		
BEDROOMS		1	2		
FIREPLACES					

HEAT & AC	B	1	2	3	U
NO HEAT	☐	☐	☐	☐	☐
CTRL HEAT	☐	■	■	☐	☐
HW/STEAM	☐	☐	☐	☐	☐
ELECTRIC	☐	☐	☐	☐	☐
HEAT PUMP	☐	☐	☐	☐	☐
FLR/WALL	☐	☐	☐	☐	☐
STVE/SPCE	☐	☐	☐	☐	☐
GEOTHERMAL	☐	☐	☐	☐	☐
OUTSIDE	☐	☐	☐	☐	☐
CTRL A/C	☐	■	■	☐	☐

PLUMBING			BASE ■		
X FULL BATH			1		
X HALF BATH					
X FIXTURES					

FLOOR	AREA	CONST	VALUE
1	1428	FR	112,330
.5	432	FR	24,810
BSMT	420		5,460
SUBTOTAL			142,600
MULTI-FAMILY #	0		0
BUILDING TYPE	100%		0
BSMT FINISH	0 S.F.		0
FIREPLACE #	0		0
HEATING	0 S.F.		0
AIR COND	1,860 S.F.		2,790
PLUMBING #	3		3,300
GARAGES & CARPORTS			14,800
EXTRA FEATURES			9,100
SUBTOTAL			172,590
GRADE FACTOR			107 %
UNADJUSTED VALUE			219,760
FACTOR			100 %

SKETCH

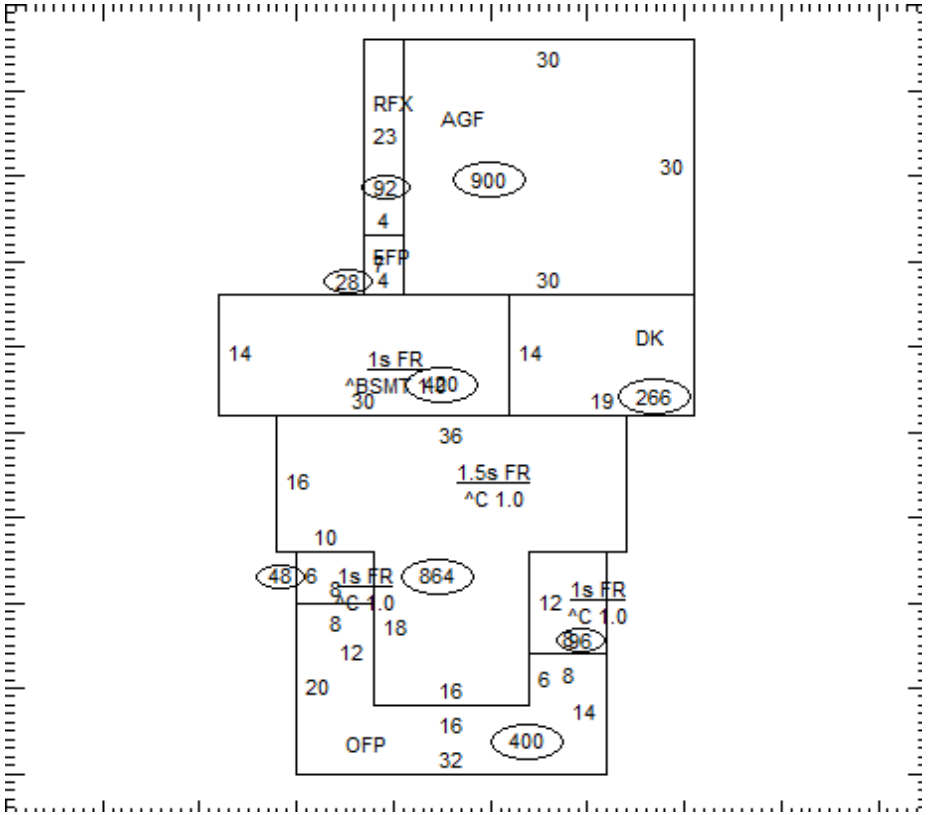

OCCUPANCY	ST.HT	SIZE	AREA	GRADE	PRICE	AGE	REMD	CND	UNADJ VAL	PHYS	PHYS VAL	FUNC	TRUE VAL
DWELLING	1.5	SK	1,860	C		1890	2020	G	219,760	19	178,010	INC35	133,100
1													
2													
3													
4													
5													
6													
7													
8													
9													
10													
11													

38-015500.0200

TOTAL 133,100

COMMENTS

Dwelling has an Economic Factor of 115%

38-015500.0200

RECOVERY TWP / FT RECOVERY SD

10-15-200-006

Property Class: 510

Neighborhood 009385-R150

Map:
Block:
Card:

Bk: Pg:

WILSON SYDNEY M & WESTGERDES ROBERT R

WILSON SYDNEY M & WESTGERDES ROBERT R
1837 ST JOE RD
FORT RECOVERY, OH 45846
Created in 2010 From 38-015500.0000 due to Split

LEGAL INFORMATION

PT NW NE

RTS: 012-07-15
Acres:2.0470

	OWNERSHIP	ADDRESS	CITY	STATE	ZIP	DATE	AMOUNT	DEED:CONV#	JS	VALID
1	WILSON SYDNEY M &	1837 ST JOE RD	FORT RECOVERY	OH	45846	10/22/2020	125,000	WDC : 791	☐	■
2	LEFEVRE THOMAS H & LISA M	2945 BURRVILLE RD	FORT RECOVERY	OH	45846	03/31/2020	1,185,000	2:WDC : 193	☐	■
3	SCHLARMAN JASON H &	1837 ST JOE RD	FORT RECOVERY	OH	45846	04/30/2010	0	QCE : X : 0	☐	☐

X: ☐ TTO LISTER: HK DATE: 05/04/2021 TIME: 12:00:00 AM ■ LETTER ☐ LETTER REC'D GIS CODE

STREET/ROAD	TOPOGRAPHY	PU-UTILITIES-PR	NEIGHBORHOOD	INFLUENCE FACTORS
☐ PAVED	☐ LEVEL	☐ WATER ☐	☐ IMPROVING	☐ A. NO ROAD ☐ F. RESTRICT
☐ GRAVEL	☐ HIGH	☐ SEWER ☐	☐ STATIC	☐ B. TOPGRHY ☐ G. WOOD LT
☐ DIRT	☐ LOW	☐ GAS ☐	☐ DECLINING	☐ C. Ex Front ☐ H. VACANCY
☐ SIDEWALKS	☐ ROLLING	☐ ELECTRIC ☐	☐ OLD	☐ D. QUANTITY ☐ I. WATER FRONT
☐ CURBS	☐ STANDARD	☐ STANDARD	☐ STANDARD	☐ E. SZ/SHAPE ☐ J. OTHER/CDU

PROPERTY LOCATION

1837 ST JOE RD,

COMMENT

LAND COMPUTATIONS

LAND TYPE	SIZE	M	RATE	C	INF	M	VALUE	C
Total Acres: 2.0470					TOTAL		28,100	0

VALUATION SUMMARY

VALUE YEAR		2011							
REASON FOR CHANGE		MISC							
APPRAISED VALUE	LAND	6,690							
	IMPR	0							
	TOTAL	6,690							
ASSESSED VALUE	LAND	2,340							
	IMPR	0							
	TOTAL	2,340							

OCCUPANCY	EXTERIOR
☐SF ☐DU ☐TR	☐ WOOD
☐CONVERSION	☐ STUCCO
BUILDING TYPE	☐ ALM/VYNL
☐ MOBILE HOME	☐ CONC BLK
☐ BI/TR LEVEL	☐ METAL
☐ MOD/MAN	☐ BRICK
☐ _____	☐ STONE

ROOFING	ROOF TYPE
☐ METAL	☐ GABLE
☐ SLT/TLE	☐ HIP
☐ SHINGLES	☐ GAMBREL
☐ SHAKES	☐ MANSARD
☐ COMPOSITE	☐ FLAT

FLOORS	B	1	2	3	U
CONCRETE	☐	☐	☐	☐	☐
WOOD	☐	☐	☐	☐	☐
TILE/COMPO	☐	☐	☐	☐	☐
CARPET	☐	☐	☐	☐	☐

INT. FINISH	B	1	2	3	U
PLASTER/DW	☐	☐	☐	☐	☐
PANELING	☐	☐	☐	☐	☐
UNFINISHED	☐	☐	☐	☐	☐

ACCOMMODATIONS					
# OF ROOMS					
BEDROOMS					
FIREPLACES					

HEAT & AC	B	1	2	3	U
NO HEAT	☐	☐	☐	☐	☐
CTRL HEAT	☐	☐	☐	☐	☐
HW/STEAM	☐	☐	☐	☐	☐
ELECTRIC	☐	☐	☐	☐	☐
HEAT PUMP	☐	☐	☐	☐	☐
FLR/WALL	☐	☐	☐	☐	☐
STVE/SPCE	☐	☐	☐	☐	☐
GEOTHERMAL	☐	☐	☐	☐	☐
OUTSIDE	☐	☐	☐	☐	☐
CTRL A/C	☐	☐	☐	☐	☐

PLUMBING	BASE ☐				
X FULL BATH					
X HALF BATH					
X FIXTURES					

FLOOR	AREA	CONST	VALUE

SUBTOTAL		0
MULTI-FAMILY #	0	0
BUILDING TYPE	000%	0
BSMT FINISH	0 S.F.	0
FIREPLACE #	0	0
HEATING	0 S.F.	0
AIR COND	0 S.F.	0
PLUMBING #	0	0
GARAGES & CARPORTS		0
EXTRA FEATURES		0
SUBTOTAL		0
GRADE FACTOR		%
UNADJUSTED VALUE		0
FACTOR		%

SKETCH

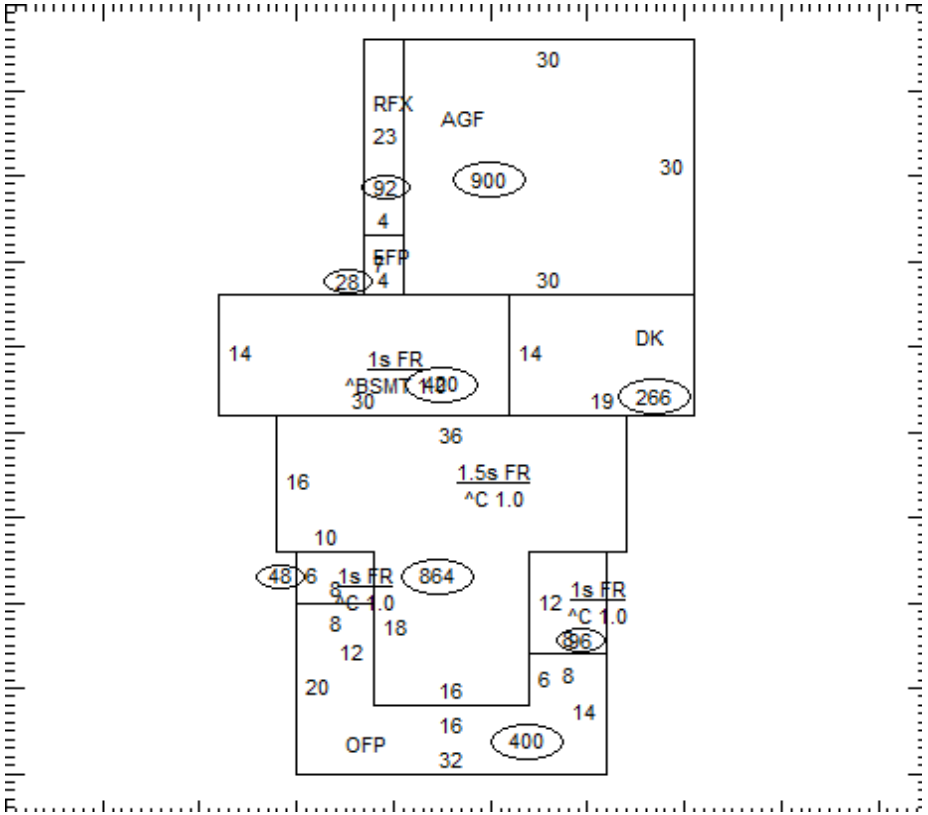

OCCUPANCY	ST.HT	SIZE	AREA	GRADE	PRICE	AGE	REMD	CND	UNADJ VAL	PHYS	PHYS VAL	FUNC	TRUE VAL
DWELLING		SK											
1													
2													
3													
4													
5													
6													
7													
8													
9													
10													
11													

38-015500.0200

TOTAL 0

COMMENTS