27-477600.0000

MEYER THOMAS J
MEYER THOMAS J
1353 MICHAEL AVE
CELINA, OH 45822

JEFFERSON TWP-CELINA CORP / CELINA SD
05-36-126-011

LEGAL INFORMATION
BRUNS SUBD

LOT#: 140

Property Class: 510
Neighborhood
27502700-03 -
Map: 01 B
Block:
Card: 44
Bk: Pg:

	OWNERSHIP	ADDRESS	CITY	STATE	ZIP	DATE	AMOUNT	DEED:CONV#	JS	VALID
1	MEYER THOMAS J	1353 MICHAEL AVE	CELINA	OH	45822	06/21/2016	270,000	WDC : 414	☐	■
2	AVERY LYNN E & BARBARA S	1353 MICHAEL AVE	CELINA	OH	45822	06/27/2001	21,400	: A : 0	☐	☐
3							0	0	☐	☐

X: ☐ TTO LISTER: DATE: 04/05/2011 TIME: 12:00:00 AM ☐ LETTER ☐ LETTER REC'D GIS CODE

STREET/ROAD	TOPOGRAPHY	PU-UTILITIES-PR	NEIGHBORHOOD	INFLUENCE FACTORS	
■ PAVED	■ LEVEL	☐ WATER ☐	■ IMPROVING	☐ A. NO ROAD	☐ F. RESTRICT
☐ GRAVEL	☐ HIGH	☐ SEWER ☐	☐ STATIC	☐ B. TOPGRHY	☐ G. WOOD LT
☐ DIRT	☐ LOW	☐ GAS ☐	☐ DECLINING	☐ C. Ex Front	☐ H. VACANCY
■ SIDEWALKS	☐ ROLLING	☐ ELECTRIC ☐	☐ OLD	☐ D. QUANTITY	☐ I. WATER FRONT
☐ CURBS	☐ STANDARD	■ STANDARD	☐ STANDARD	☐ E. SZ/SHAPE	☐ J. OTHER/CDU

PROPERTY LOCATION
1353 MICHAEL AVE,

COMMENT
TY2019:Net Gen=$3,376.88, Other Assessment=$0.00
DE11 CHG OFP TO OMP
DE16 DESKTOP REVIEW//CORR SHED SIZE
TriDwell=122 TriOB=122 TriLand=122

LAND COMPUTATIONS

LAND TYPE	SIZE	M RATE C	INF	M VALUE C
F:Front	F114 D125	ST260 DP91 ADJ237		32,900 0
			TOTAL	32,900 0

VALUATION SUMMARY

VALUE YEAR		2020	2017	2016	2014	2011	2011		
REASON FOR CHANGE		RAPP	RAPP	MISC	RAPP	RAPP	MISC		
APPRAISED VALUE	LAND	32,900	27,000	29,400	29,400	27,000	23,400		
	IMPR	252,200	211,600	229,400	227,500	208,700	246,700		
	TOTAL	285,100	238,600	258,800	256,900	235,700	270,100		
ASSESSED VALUE	LAND	11,520	9,450	10,290	10,290	9,450	8,190		
	IMPR	88,270	74,060	80,290	79,630	73,050	86,350		
	TOTAL	99,790	83,510	90,580	89,920	82,500	94,540		

OCCUPANCY	EXTERIOR
■ SF ☐ DU ☐ TR	☐ WOOD
☐ CONVERSION	☐ STUCCO
BUILDING TYPE	☐ ALM/VYNL
☐ MOBILE HOME	☐ CONC BLK
☐ BI/TR LEVEL	☐ METAL
☐ MOD/MAN	■ BRICK
☐ _____	☐ STONE
ROOFING	**ROOF TYPE**
☐ METAL	■ GABLE
☐ SLT/TLE	☐ HIP
■ SHINGLES	☐ GAMBREL
☐ SHAKES	☐ MANSARD
☐ COMPOSITE	☐ FLAT

FLOORS	B	1	2	3	U
CONCRETE	■	☐	☐	☐	☐
WOOD	☐	☐	☐	☐	☐
TILE/COMPO	☐	■	☐	☐	☐
CARPET	■	■	☐	☐	☐

INT. FINISH	B	1	2	3	U
PLASTER/DW	■	■	☐	☐	☐
PANELING	☐	☐	☐	☐	☐
UNFINISHED	☐	☐	☐	☐	☐

ACCOMMODATIONS					
# OF ROOMS	2	5			
BEDROOMS	1	2			
FIREPLACES					

HEAT & AC	B	1	2	3	U
NO HEAT	☐	☐	☐	☐	☐
CTRL HEAT	■	■	☐	☐	☐
HW/STEAM	☐	☐	☐	☐	☐
ELECTRIC	☐	☐	☐	☐	☐
HEAT PUMP	☐	☐	☐	☐	☐
FLR/WALL	☐	☐	☐	☐	☐
STVE/SPCE	☐	☐	☐	☐	☐
GEOTHERMAL	☐	☐	☐	☐	☐
OUTSIDE	☐	☐	☐	☐	☐
CTRL A/C	■	■	☐	☐	☐

PLUMBING			BASE ■		
X FULL BATH	1	1			
X HALF BATH					
X FIXTURES					

FLOOR	AREA	CONST	VALUE
1	2179	BRK	159,110
BSMT	2179		28,330
SUBTOTAL			187,440
MULTI-FAMILY #	0		0
BUILDING TYPE	100%		0
BSMT FINISH	1,090 S.F.		14,170
FIREPLACE #	0		0
HEATING	0 S.F.		0
AIR COND	3,269 S.F.		4,910
PLUMBING #	6		6,600
GARAGES & CARPORTS			18,600
EXTRA FEATURES			1,700
SUBTOTAL			0
GRADE FACTOR			115 %
UNADJUSTED VALUE			327,490
FACTOR			100 %

SKETCH

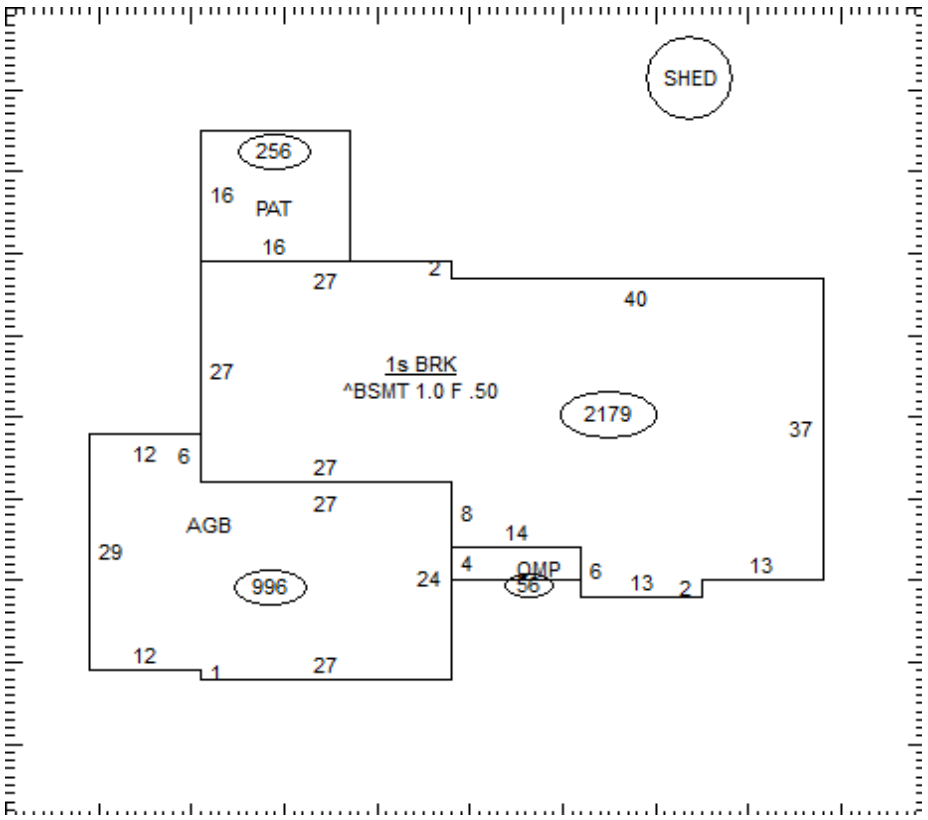

OCCUPANCY	ST.HT	SIZE	AREA	GRADE	PRICE	AGE	REMD	CND	UNADJ VAL	PHYS	PHYS VAL	FUNC	TRUE VAL
DWELLING	1	SK	2,179	B-		2001		A	327,490	16	275,090		250,300
1 Shed		12x16	192	C	9.63	2009		A	2,250	17	1,870		1,900
2													
3													
4													
5													
6													
7													
8													
9													
10													
11													
											TOTAL		252,200

27-477600.0000

COMMENTS

Dwelling has an Economic Factor of 91%