17-041500.0000

GRUSS NATHAN M
GRUSS NATHAN M
202 W CALDWELL ST
FORT RECOVERY, OH 45846

GIBSON TWP-FT RECOVERY CORP / FT RECOVERY SD
13-09-352-013

LEGAL INFORMATION
GEO W KRENNING ADDITION

LOT#: 6

Property Class: 510
Neighborhood 001703-TM50
Map: 04B
Block:
Card: 191
Bk: Pg:

	OWNERSHIP	ADDRESS	CITY	STATE	ZIP	DATE	AMOUNT	DEED:CONV#	JS	VALID
1	GRUSS NATHAN M	202 W CALDWELL ST	FORT RECOVERY	OH	45846	07/10/2019	120,000	2:WDC : 475	☐	■
2	WESTGERDES JACOB	202 W CALDWELL ST	FORT RECOVERY	OH	45846	09/22/2017	90,000	2:WDC : 644	☐	■
3	FULLENKAMP R ELIZABETH	202 W CALDWELL ST PO BOX 352	FT RECOVERY	OH	45846 -0352	09/12/1986	0	: X : 0	☐	☐

X: ☐ TTO LISTER: NS DATE: 09/22/2004 TIME: 12:41:45 PM ☐ LETTER ☐ LETTER REC'D GIS CODE

STREET/ROAD	TOPOGRAPHY	PU-UTILITIES-PR	NEIGHBORHOOD	INFLUENCE FACTORS	
■ PAVED	☐ LEVEL	☐ WATER ☐	☐ IMPROVING	☐ A. NO ROAD	☐ F. RESTRICT
☐ GRAVEL	■ HIGH	☐ SEWER ☐	■ STATIC	☐ B. TOPGRHY	☐ G. WOOD LT
☐ DIRT	☐ LOW	☐ GAS ☐	☐ DECLINING	☐ C. Ex Front	☐ H. VACANCY
☐ SIDEWALKS	☐ ROLLING	☐ ELECTRIC ☐	☐ OLD	☐ D. QUANTITY	☐ I. WATER FRONT
☐ CURBS	☐ STANDARD	■ STANDARD	☐ STANDARD	☐ E. SZ/SHAPE	☐ J. OTHER/CDU

PROPERTY LOCATION
200 CALDWELL ST, FT RECOVERY

COMMENT
TY2019:Net Gen=$1,266.54, Other Assessment=$3.52
DE16 DESKTOP REVIEW CHGS: cor dwlg msmnts
DE15 RMV OLD GRG/VERIFIED AERIALS/PER DATA MAILER
DE18 RMV OWN OCC. Did not return app
TriDwell=105 TriOB=105 TriLand=105
(Mod ST:)111

LAND COMPUTATIONS

LAND TYPE	SIZE	M RATE C	INF	M VALUE C
F:Front	F66 D179	ST211 DP109 ADJ230		16,000 0
			TOTAL	16,000 0

VALUATION SUMMARY

		2020	2017	2016	2015	2014	2013	2011
VALUE YEAR		2020	2017	2016	2015	2014	2013	2011
REASON FOR CHANGE		RAPP	RAPP	MISC	REMB	RAPP	MISC	RAPP
APPRAISED VALUE	LAND	16,000	13,700	12,700	12,700	12,700	13,700	13,700
	IMPR	84,400	73,900	61,900	63,200	63,300	68,200	66,200
	TOTAL	100,400	87,600	74,600	75,900	76,000	81,900	79,900
ASSESSED VALUE	LAND	5,600	4,800	4,450	4,450	4,450	4,800	4,800
	IMPR	29,540	25,870	21,670	22,120	22,160	23,870	23,170
	TOTAL	35,140	30,670	26,120	26,570	26,610	28,670	27,970

OCCUPANCY	EXTERIOR
■ SF ☐ DU ☐ TR	■ WOOD
☐ CONVERSION	☐ STUCCO
BUILDING TYPE	☐ ALM/VYNL
☐ MOBILE HOME	☐ CONC BLK
☐ BI/TR LEVEL	☐ METAL
☐ MOD/MAN	☐ BRICK
☐ _____	☐ STONE

ROOFING	ROOF TYPE
☐ METAL	■ GABLE
☐ SLT/TLE	☐ HIP
■ SHINGLES	☐ GAMBREL
☐ SHAKES	☐ MANSARD
☐ COMPOSITE	☐ FLAT

FLOORS	B	1	2	3	U
CONCRETE	■	☐	☐	☐	☐
WOOD	☐	■	☐	☐	☐
TILE/COMPO	☐	☐	☐	☐	☐
CARPET	☐	■	☐	☐	☐

INT. FINISH	B	1	2	3	U
PLASTER/DW	☐	■	☐	☐	☐
PANELING	☐	☐	☐	☐	☐
UNFINISHED	■	☐	■	☐	☐

ACCOMMODATIONS					
# OF ROOMS		6	2		
BEDROOMS		3			
FIREPLACES					

HEAT & AC	B	1	2	3	U
NO HEAT	☐	☐	☐	☐	☐
CTRL HEAT	☐	■	☐	☐	☐
HW/STEAM	☐	☐	☐	☐	☐
ELECTRIC	☐	☐	☐	☐	☐
HEAT PUMP	☐	☐	☐	☐	☐
FLR/WALL	☐	☐	☐	☐	☐
STVE/SPCE	☐	☐	☐	☐	☐
GEOTHERMAL	☐	☐	☐	☐	☐
OUTSIDE	☐	☐	☐	☐	☐
CTRL A/C	☐	■	☐	☐	☐

PLUMBING	BASE ■				
X FULL BATH					
X HALF BATH					
X FIXTURES					

FLOOR	AREA	CONST	VALUE
1	1538	FR	117,720
+	0	FR	11,140
BSMT	769		10,000

SUBTOTAL			138,860
MULTI-FAMILY #	0		0
BUILDING TYPE	100%		0
BSMT FINISH	0	S.F.	0
FIREPLACE #	0		0
HEATING	0	S.F.	0
AIR COND	1,538	S.F.	2,310
PLUMBING #	0		0
GARAGES & CARPORTS			0
EXTRA FEATURES			9,700
SUBTOTAL			0
GRADE FACTOR			104 %
UNADJUSTED VALUE			164,750
FACTOR			100 %

SKETCH

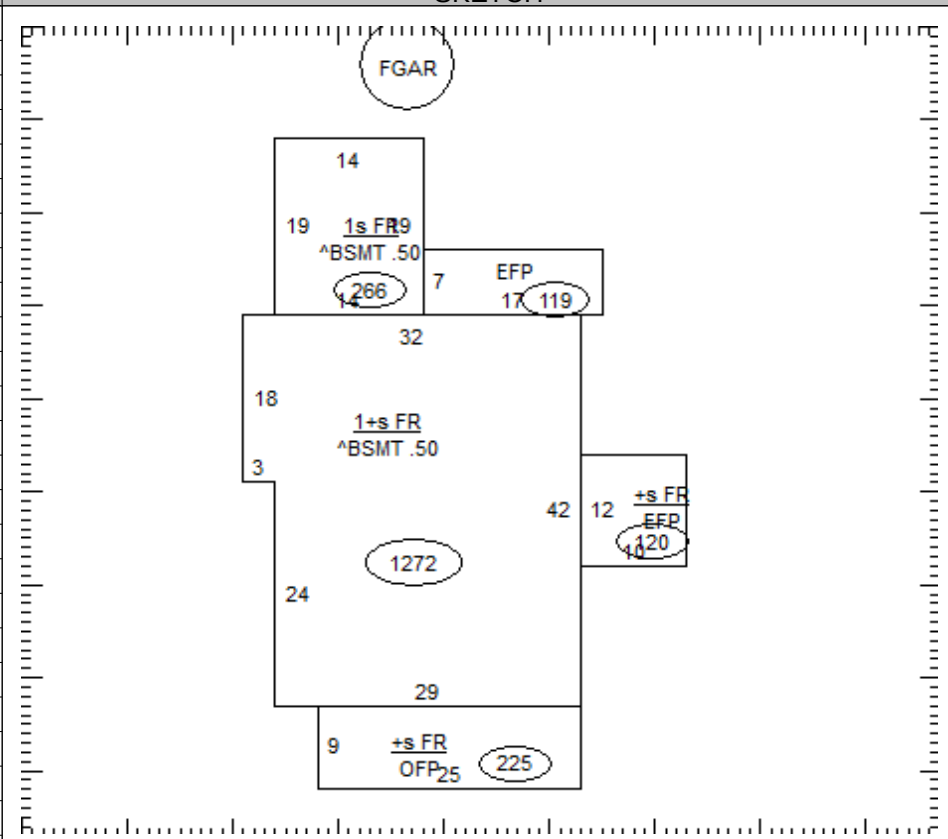

OCCUPANCY	ST.HT	SIZE	AREA	GRADE	PRICE	AGE	REMD	CND	UNADJ VAL	PHYS	PHYS VAL	FUNC	TRUE VAL
DWELLING	1+	SK	1,538	C-		1903		A	164,750	45	90,610		81,500
1 Gar - Frame		24x34	816	C	16.91	1973		A	14,490	80	2,900		2,900
2													
3													
4													
5													
6													
7													
8													
9													
10													
11													
											TOTAL		84,400

17-041500.0000

COMMENTS

Dwelling has an Economic Factor of 90%