09-063500.0800

FRANKLIN TWP / CELINA SD

09-21-252-008

Property Class: 510

Neighborhood 095CL50-CL50

Map: 04A
Block:
Card: 34

Bk: Pg:

CSEH JERRY & LORA
CSEH JERRY & LORA
411 VALLEYVIEW DR
ENGLEWOOD, OH 45322

LEGAL INFORMATION
PRAIRIE BROOK ADD
PLATTED 12/24/96
LOT#: 8

	OWNERSHIP	ADDRESS	CITY	STATE	ZIP	DATE	AMOUNT	DEED:CONV#	JS	VALID
1	CSEH JERRY & LORA	411 VALLEYVIEW DR	ENGLEWOOD	OH	45322	09/20/2007	155,000	WDC : A : 669	☐	■
2	HATFIELD FRENCH & SARAH	7262 PRAIRIE BROOK DR	CELINA	OH	45822	09/11/2002	139,900	: A : 0	☐	■
3							0	0	☐	☐

X: Signature ☐ TTO | LISTER: CG | DATE: 04/21/2004 | TIME: 01:11:48 PM | ☐ LETTER | ☐ LETTER REC'D | GIS CODE

STREET/ROAD	TOPOGRAPHY	PU-UTILITIES-PR	NEIGHBORHOOD	INFLUENCE FACTORS
■ PAVED	■ LEVEL	☐ WATER ☐	■ IMPROVING	☐ A. NO ROAD ☐ F. RESTRICT
☐ GRAVEL	☐ HIGH	☐ SEWER ☐	☐ STATIC	☐ B. TOPGRHY ☐ G. WOOD LT
☐ DIRT	☐ LOW	☐ GAS ☐	☐ DECLINING	☐ C. Ex Front ☐ H. VACANCY
☐ SIDEWALKS	☐ ROLLING	☐ ELECTRIC ☐	☐ OLD	☐ D. QUANTITY ☐ I. WATER FRONT
☐ CURBS	☐ STANDARD	■ STANDARD	☐ STANDARD	☐ E. SZ/SHAPE ☐ J. OTHER/CDU

PROPERTY LOCATION

7262 PRAIRIE BROOK DR, CELINA

COMMENT

TY2019:Net Gen=$2,430.06, Other Assessment=$0.00
DE17 DESKTOP REVIEW//RMV STP
TriDwell=105 TriOB=105 TriLand=105

LAND COMPUTATIONS

LAND TYPE	SIZE	M RATE C	INF	M VALUE C
F:Front	F125 D134	ST500 DP94 ADJ470		61,700 0
			TOTAL	61,700 0

VALUATION SUMMARY

VALUE YEAR		2020	2017	2017	2014	2011			
REASON FOR CHANGE		RAPP	RAPP	MISC	RAPP	RAPP			
APPRAISED VALUE	LAND	61,700	58,800	58,800	58,800	58,800			
	IMPR	106,500	100,900	108,000	108,200	108,200			
	TOTAL	168,200	159,700	166,800	167,000	167,000			
ASSESSED VALUE	LAND	21,600	20,580	20,580	20,580	20,580			
	IMPR	37,280	35,320	37,800	37,870	37,870			
	TOTAL	58,880	55,900	58,380	58,450	58,450			

OCCUPANCY	EXTERIOR
■SF ☐DU ☐TR	☐ WOOD
☐CONVERSION	☐ STUCCO
BUILDING TYPE	■ ALM/VYNL
☐ MOBILE HOME	☐ CONC BLK
☐ BI/TR LEVEL	☐ METAL
☐ MOD/MAN	☐ BRICK
☐ _____	☐ STONE

ROOFING	ROOF TYPE
☐ METAL	■ GABLE
☐ SLT/TLE	☐ HIP
■ SHINGLES	☐ GAMBREL
☐ SHAKES	☐ MANSARD
☐ COMPOSITE	☐ FLAT

FLOORS	B	1	2	3	U
CONCRETE	☐	☐	☐	☐	☐
WOOD	☐	☐	☐	☐	☐
TILE/COMPO	☐	■	☐	☐	☐
CARPET	☐	■	☐	☐	☐

INT. FINISH	B	1	2	3	U
PLASTER/DW	☐	■	☐	☐	☐
PANELING	☐	☐	☐	☐	☐
UNFINISHED	☐	☐	☐	☐	☐

ACCOMMODATIONS					
# OF ROOMS		6			
BEDROOMS		3			
FIREPLACES					

HEAT & AC	B	1	2	3	U
NO HEAT	☐	☐	☐	☐	☐
CTRL HEAT	☐	■	☐	☐	☐
HW/STEAM	☐	☐	☐	☐	☐
ELECTRIC	☐	☐	☐	☐	☐
HEAT PUMP	☐	☐	☐	☐	☐
FLR/WALL	☐	☐	☐	☐	☐
STVE/SPCE	☐	☐	☐	☐	☐
GEOTHERMAL	☐	☐	☐	☐	☐
OUTSIDE	☐	☐	☐	☐	☐
CTRL A/C	☐	■	☐	☐	☐

PLUMBING					BASE ■
X FULL BATH		1			
X HALF BATH					
X FIXTURES					

FLOOR	AREA	CONST	VALUE
1	1296	FR	108,890
SUBTOTAL			108,890
MULTI-FAMILY #	0		0
BUILDING TYPE	100%		0
BSMT FINISH	0 S.F.		0
FIREPLACE #	0		0
HEATING	0 S.F.		0
AIR COND	1,296 S.F.		1,940
PLUMBING #	3		3,300
GARAGES & CARPORTS			9,900
EXTRA FEATURES			0
SUBTOTAL			0
GRADE FACTOR			107 %
UNADJUSTED VALUE			139,350
FACTOR			100 %

SKETCH

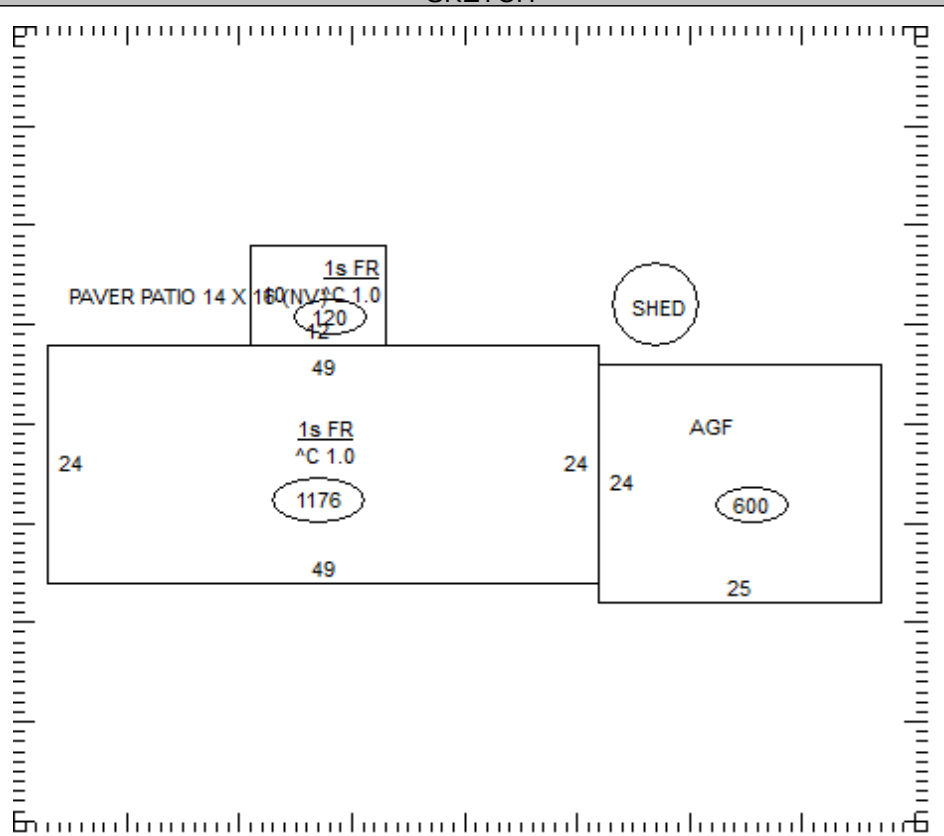

OCCUPANCY	ST.HT	SIZE	AREA	GRADE	PRICE	AGE	REMD	CND	UNADJ VAL	PHYS	PHYS VAL	FUNC	TRUE VAL
DWELLING	1	SK	1,296	C		1999		A	139,350	22	108,690		106,500
1 Shed		10x10	100	C		2003		A		29			0
2													
3													
4													
5													
6													
7													
8													
9													
10													
11													

09-063500.0800

TOTAL 106,500

COMMENTS

IRREGULAR LOT
Dwelling has an Economic Factor of 98%