06-016600.0000

CENTER TWP / CELINA SD

06-09-200-005

Property Class: 510

Neighborhood 009065-R150

Map: 06
Block:
Card: 46

Bk: Pg:

ELMGLADE FARMS LLC
ELMGLADE FARMS LLC
PO BOX 968
COLBY, KS 67701

LEGAL INFORMATION
OUT S SD SW NE

RTS: 003-05-09
Acres:2.0000

	OWNERSHIP	ADDRESS	CITY	STATE	ZIP	DATE	AMOUNT	DEED:CONV#	JS	VALID
1	ELMGLADE FARMS LLC	PO BOX 968	COLBY	KS	67701	08/24/2018	125,000	WDC : 630	☐	■
2	MUHLENKAMP SCOTT LEE	7260 US RTE 33	CELINA	OH	45822	12/01/2004	109,900	WDC : A : 0	☐	■
3	WALLS DONNA J	7260 US RT 33	CELINA	OH	45822	02/13/2003	0	: X : 0	☐	☐

X: ☐ TTO LISTER: CG DATE: 09/11/2006 TIME: 12:00:00 AM ☐ LETTER ☐ LETTER REC'D GIS CODE

STREET/ROAD	TOPOGRAPHY	PU-UTILITIES-PR	NEIGHBORHOOD	INFLUENCE FACTORS
■ PAVED	■ LEVEL	☐ WATER ■	☐ IMPROVING	☐ A. NO ROAD ☐ F. RESTRICT
☐ GRAVEL	☐ HIGH	☐ SEWER ■	☐ STATIC	☐ B. TOPGRHY ☐ G. WOOD LT
☐ DIRT	☐ LOW	■ GAS ☐	☐ DECLINING	☐ C. Ex Front ☐ H. VACANCY
☐ SIDEWALKS	☐ ROLLING	■ ELECTRIC☐	☐ OLD	☐ D. QUANTITY ☐ I. WATER FRONT
☐ CURBS	☐ STANDARD	☐ STANDARD	■ STANDARD	☐ E. SZ/SHAPE ☐ J. OTHER/CDU

PROPERTY LOCATION

7260 U S RTE 33 , CELINA

COMMENT

TY2019:Net Gen=$1,494.52, Other Assessment=$2.00
DE09 PER DATA MAILER CORRECTED BASEMENT
DE17 DESKTOP RVW CHGS: COR SKETCH
DE19 RMV OWN OCC; DIDN'T RET APP
TriDwell=110 TriOB=110 TriLand=110

LAND COMPUTATIONS

LAND TYPE	SIZE	M RATE C	INF	M VALUE C
HS:Home Site	AC:1	16500		18,200 0
SM:Small Acreage	AC:1	7000		7,700 0
Total Acres: 2.0000			TOTAL	25,900 0

VALUATION SUMMARY

VALUE YEAR		2020	2017	2017	2014	2011	2009		
REASON FOR CHANGE		RAPP	RAPP	MISC	RAPP	RAPP	MISC		
APPRAISED VALUE	LAND	25,900	23,500	23,300	23,300	22,000	22,000		
	IMPR	89,000	77,200	78,300	70,100	66,100	62,500		
	TOTAL	114,900	100,700	101,600	93,400	88,100	84,500		
ASSESSED VALUE	LAND	9,070	8,230	8,160	8,160	7,700	7,700		
	IMPR	31,150	27,020	27,410	24,540	23,140	21,880		
	TOTAL	40,220	35,250	35,570	32,700	30,840	29,580		

OCCUPANCY	EXTERIOR
■SF ☐DU ☐TR	☐ WOOD
☐CONVERSION	☐ STUCCO
BUILDING TYPE	■ ALM/VYNL
☐ MOBILE HOME	☐ CONC BLK
☐ BI/TR LEVEL	☐ METAL
☐ MOD/MAN	☐ BRICK
☐ _____	☐ STONE

ROOFING	ROOF TYPE
☐ METAL	■ GABLE
☐ SLT/TLE	☐ HIP
■ SHINGLES	☐ GAMBREL
☐ SHAKES	☐ MANSARD
☐ COMPOSITE	☐ FLAT

FLOORS	B	1	2	3	U
CONCRETE	■	☐	☐	☐	☐
WOOD	☐	■	■	☐	☐
TILE/COMPO	☐	☐	☐	☐	☐
CARPET	☐	☐	☐	☐	☐

INT. FINISH	B	1	2	3	U
PLASTER/DW	☐	■	■	☐	☐
PANELING	☐	☐	☐	☐	☐
UNFINISHED	☐	☐	☐	☐	☐

ACCOMMODATIONS					
# OF ROOMS		4	3		
BEDROOMS		1	2		
FIREPLACES					

HEAT & AC	B	1	2	3	U
NO HEAT	☐	☐	☐	☐	☐
CTRL HEAT	☐	■	■	☐	☐
HW/STEAM	☐	☐	☐	☐	☐
ELECTRIC	☐	☐	☐	☐	☐
HEAT PUMP	☐	☐	☐	☐	☐
FLR/WALL	☐	☐	☐	☐	☐
STVE/SPCE	☐	☐	☐	☐	☐
GEOTHERMAL	☐	☐	☐	☐	☐
OUTSIDE	☐	☐	☐	☐	☐
CTRL A/C	☐	■	■	☐	☐

PLUMBING					BASE ■
X FULL BATH					
X HALF BATH					
X FIXTURES					

FLOOR	AREA	CONST	VALUE
1	1232	FR	103,510
.5	364	FR	22,330
BSMT	144		1,870
SUBTOTAL			127,710
MULTI-FAMILY #	0		0
BUILDING TYPE	100%		0
BSMT FINISH	0 S.F.		0
FIREPLACE #	0		0
HEATING	0 S.F.		0
AIR COND	1,596 S.F.		2,400
PLUMBING #	0		0
GARAGES & CARPORTS			9,500
EXTRA FEATURES			9,000
SUBTOTAL			0
GRADE FACTOR			110 %
UNADJUSTED VALUE			179,820
FACTOR			100 %

SKETCH

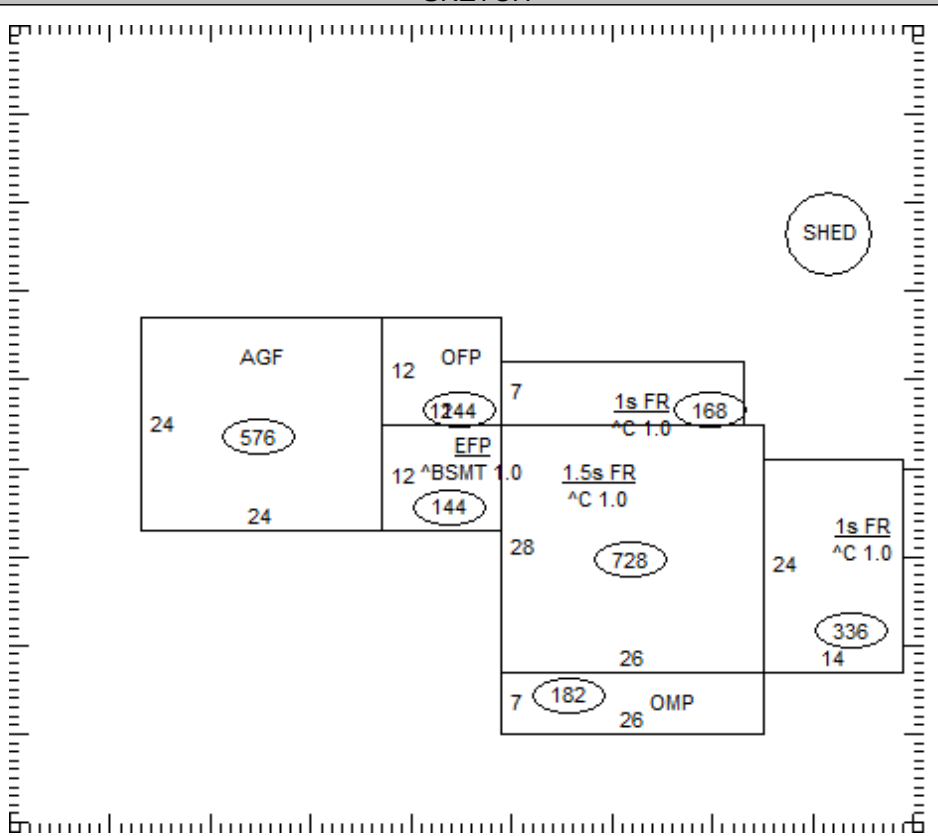

OCCUPANCY	ST.HT	SIZE	AREA	GRADE	PRICE	AGE	REMD	CND	UNADJ VAL	PHYS	PHYS VAL	FUNC	TRUE VAL
DWELLING	1.5	SK	1,596	C+		1915		A	179,820	45	98,900		89,000
1 Shed	PP	10x12	120	C		2000		A		35			0
2													
3													
4													
5													
6													
7													
8													
9													
10													
11													

06-016600.0000

TOTAL 89,000

COMMENTS

MH #54 - 0503 1975 NASHUA 12X60 DEWANE WALLS
Dwelling has an Economic Factor of 90%