05-010400.0000

**GRUSS KEITH G & MELISSA A**

GRUSS KEITH G & MELISSA A
306 N ELM ST
COLDWATER, OH 45828

BUTLER TWP-COLDWATER CORP / COLDWATER SD
08-28-452-018

**LEGAL INFORMATION**

OUT S SD SE

RTS: 002-06-28
Acres:0.4100 M:0.0000

**QUALIFIED CREDITS:**
**HOMESTEAD**

Property Class: 510
Neighborhood
000506-TS50
Map: 14B9
Block:
Card: 88
Bk: Pg:

| | OWNERSHIP | ADDRESS | CITY | STATE | ZIP | DATE | AMOUNT | DEED:CONV# | JS | VALID |
|---|---|---|---|---|---|---|---|---|---|---|
| 1 | GRUSS KEITH G & MELISSA A | 306 N ELM ST | COLDWATER | OH | 45828 | 04/27/2020 | 280,000 | WDC : 256 | ☐ | ■ |
| 2 | DESCH DONALD P & | 306 N ELM ST | COLDWATER | OH | 45828 | 11/15/2001 | 0 | : X : 0 | ☐ | ☐ |
| 3 | | | | | | | 0 | 0 | ☐ | ☐ |

X: ☐ TTO LISTER: NS DATE: 01/25/2005 TIME: 12:00:00 AM ☐ LETTER ■ LETTER REC'D GIS CODE

| STREET/ROAD | TOPOGRAPHY | PU-UTILITIES-PR | NEIGHBORHOOD | INFLUENCE FACTORS | |
|---|---|---|---|---|---|
| ■ PAVED | ■ LEVEL | ☐ WATER ☐ | ☐ IMPROVING | ☐ A. NO ROAD | ☐ F. RESTRICT |
| ☐ GRAVEL | ☐ HIGH | ☐ SEWER ☐ | ■ STATIC | ☐ B. TOPGRHY | ☐ G. WOOD LT |
| ☐ DIRT | ☐ LOW | ☐ GAS ☐ | ☐ DECLINING | ☐ C. Ex Front | ☐ H. VACANCY |
| ■ SIDEWALKS | ☐ ROLLING | ☐ ELECTRIC ☐ | ☐ OLD | ☐ D. QUANTITY | ☐ I. WATER FRONT |
| ☐ CURBS | ☐ STANDARD | ■ STANDARD | ☐ STANDARD | ☐ E. SZ/SHAPE | ☐ J. OTHER/CDU |

PROPERTY LOCATION

306 N ELM ST, COLDWATER

COMMENT

TY2019:Net Gen=$2,484.24, Other Assessment=$0.00
DE17 FIELDRVW CHG: RESKETCH DWLG
TriDwell=120 TriOB=120 TriLand=120

LAND COMPUTATIONS

| LAND TYPE | SIZE | M RATE C | INF | M VALUE C |
|---|---|---|---|---|
| F:Front | F146 D120 | ST260 DP89 ADJ231 | | 40,400 0 |
| | | | TOTAL | 40,400 0 |

VALUATION SUMMARY

| | | | | | | | | | |
|---|---|---|---|---|---|---|---|---|---|
| VALUE YEAR | | 2020 | 2017 | 2017 | 2014 | 2011 | | | |
| REASON FOR CHANGE | | RAPP | RAPP | MISC | RAPP | RAPP | | | |
| APPRAISED VALUE | LAND | 40,400 | 33,700 | 36,100 | 36,100 | 33,700 | | | |
| | IMPR | 212,500 | 186,000 | 174,800 | 180,100 | 168,300 | | | |
| | TOTAL | 252,900 | 219,700 | 210,900 | 216,200 | 202,000 | | | |
| ASSESSED VALUE | LAND | 14,140 | 11,800 | 12,640 | 12,640 | 11,800 | | | |
| | IMPR | 74,380 | 65,100 | 61,180 | 63,040 | 58,910 | | | |
| | TOTAL | 88,520 | 76,900 | 73,820 | 75,680 | 70,710 | | | |

| OCCUPANCY | EXTERIOR |
|---|---|
| ■ SF ☐ DU ☐ TR | ☐ WOOD |
| ☐ CONVERSION | ☐ STUCCO |
| **BUILDING TYPE** | ☐ ALM/VYNL |
| ☐ MOBILE HOME | ☐ CONC BLK |
| ☐ BI/TR LEVEL | ☐ METAL |
| ☐ MOD/MAN | ■ BRICK |
| ☐ _____ | ☐ STONE |

| ROOFING | ROOF TYPE |
|---|---|
| ☐ METAL | ■ GABLE |
| ☐ SLT/TLE | ☐ HIP |
| ■ SHINGLES | ☐ GAMBREL |
| ☐ SHAKES | ☐ MANSARD |
| ☐ COMPOSITE | ☐ FLAT |

| FLOORS | B | 1 | 2 | 3 | U |
|---|---|---|---|---|---|
| CONCRETE | ■ | ☐ | ☐ | ☐ | ☐ |
| WOOD | ☐ | ■ | ■ | ☐ | ☐ |
| TILE/COMPO | ☐ | ☐ | ☐ | ☐ | ☐ |
| CARPET | ☐ | ☐ | ☐ | ☐ | ☐ |

| INT. FINISH | B | 1 | 2 | 3 | U |
|---|---|---|---|---|---|
| PLASTER/DW | ☐ | ■ | ■ | ☐ | ☐ |
| PANELING | ☐ | ☐ | ☐ | ☐ | ☐ |
| UNFINISHED | ■ | ☐ | ☐ | ☐ | ☐ |

| ACCOMMODATIONS | | | | | |
|---|---|---|---|---|---|
| # OF ROOMS | | 5 | 2 | | |
| BEDROOMS | | 2 | 2 | | |
| FIREPLACES | | 1 | | | |

| HEAT & AC | B | 1 | 2 | 3 | U |
|---|---|---|---|---|---|
| NO HEAT | ☐ | ☐ | ☐ | ☐ | ☐ |
| CTRL HEAT | ☐ | ■ | ■ | ☐ | ☐ |
| HW/STEAM | ☐ | ☐ | ☐ | ☐ | ☐ |
| ELECTRIC | ☐ | ☐ | ☐ | ☐ | ☐ |
| HEAT PUMP | ☐ | ☐ | ☐ | ☐ | ☐ |
| FLR/WALL | ☐ | ☐ | ☐ | ☐ | ☐ |
| STVE/SPCE | ☐ | ☐ | ☐ | ☐ | ☐ |
| GEOTHERMAL | ☐ | ☐ | ☐ | ☐ | ☐ |
| OUTSIDE | ☐ | ☐ | ☐ | ☐ | ☐ |
| CTRL A/C | ☐ | ■ | ■ | ☐ | ☐ |

| PLUMBING | BASE ■ | | | |
|---|---|---|---|---|
| X FULL BATH | | 1 | | |
| X HALF BATH | | | | |
| X FIXTURES | | | | |

| FLOOR | AREA | CONST | VALUE |
|---|---|---|---|
| 1 | 1825 | BRK | 139,920 |
| .5 | 546 | BRK | 30,580 |
| BSMT | 1825 | | 23,730 |
| SUBTOTAL | | | 194,230 |
| MULTI-FAMILY # | 0 | | 0 |
| BUILDING TYPE | 100% | | 0 |
| BSMT FINISH | 0 S.F. | | 0 |
| FIREPLACE # | 1 | | 4,000 |
| HEATING | 0 S.F. | | 0 |
| AIR COND | 2,371 S.F. | | 3,560 |
| PLUMBING # | 3 | | 3,300 |
| GARAGES & CARPORTS | | | 10,700 |
| EXTRA FEATURES | | | 3,600 |
| SUBTOTAL | | | 0 |
| GRADE FACTOR | | | 115 % |
| UNADJUSTED VALUE | | | 302,760 |
| FACTOR | | | 100 % |

SKETCH

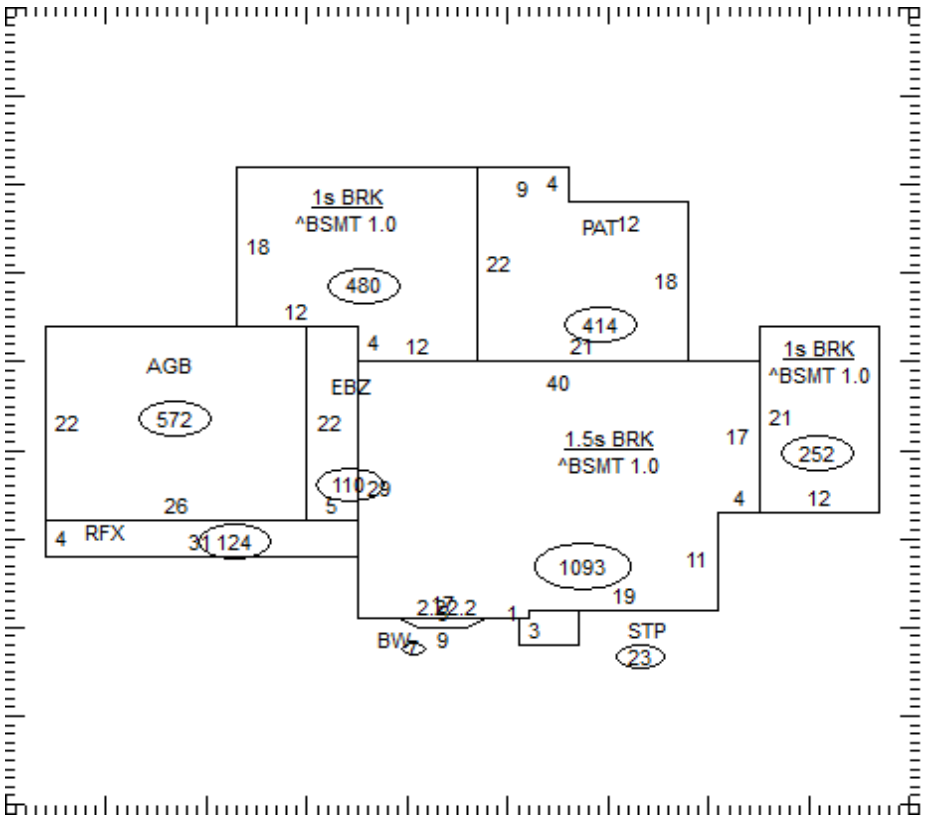


| OCCUPANCY | ST.HT | SIZE | AREA | GRADE | PRICE | AGE | REMD | CND | UNADJ VAL | PHYS | PHYS VAL | FUNC | TRUE VAL |
|---|---|---|---|---|---|---|---|---|---|---|---|---|---|
| DWELLING | 1.5 | SK | 2,371 | B- | | 1949 | | A | 302,760 | 40 | 181,660 | | 212,500 |
| 1 | | | | | | | | | | | | | |
| 2 | | | | | | | | | | | | | |
| 3 | | | | | | | | | | | | | |
| 4 | | | | | | | | | | | | | |
| 5 | | | | | | | | | | | | | |
| 6 | | | | | | | | | | | | | |
| 7 | | | | | | | | | | | | | |
| 8 | | | | | | | | | | | | | |
| 9 | | | | | | | | | | | | | |
| 10 | | | | | | | | | | | | | |
| 11 | | | | | | | | | | | | | |
| | | | | | | | | | | | TOTAL | | 212,500 |

05-010400.0000

COMMENTS

Dwelling has an Economic Factor of 117%