03-020200.0000

BUTLER TWP / COLDWATER SD

08-26-400-006

Property Class: 510

Neighborhood 009035-R150

Map: 13
Block:
Card: 33

Bk: Pg:

GEIER KEVIN M & ELIZBETH S
GEIER KEVIN M & ELIZBETH S
5440 ST RTE 219
COLDWATER, OH 45828

LEGAL INFORMATION
PT SE SE

RTS: 002-06-26
Acres:0.4790

	OWNERSHIP	ADDRESS	CITY	STATE	ZIP	DATE	AMOUNT	DEED:CONV#	JS	VALID
1	GEIER KEVIN M & ELIZBETH S	5440 ST RTE 219	COLDWATER	OH	45828	09/24/2018	180,000	WDC : 732	☐	■
2	SEITZ SHAUN S & ERIN K	5440 ST RTE 219	COLDWATER	OH	45828	05/19/2008	118,000	WDC : F : 321	☐	☐
3	SEITZ MARY ANN	5440 ST RT 219	COLDWATER	OH	45828	04/24/2000	0	: X : 0	☐	☐

X: ☐ TTO LISTER: JO DATE: 04/15/2005 TIME: 12:00:00 AM ☐ LETTER ■ LETTER REC'D GIS CODE

STREET/ROAD	TOPOGRAPHY	PU-UTILITIES-PR	NEIGHBORHOOD	INFLUENCE FACTORS
■ PAVED	■ LEVEL	☐ WATER ■	☐ IMPROVING	☐ A. NO ROAD ☐ F. RESTRICT
☐ GRAVEL	☐ HIGH	☐ SEWER ■	■ STATIC	☐ B. TOPGRHY ☐ G. WOOD LT
☐ DIRT	☐ LOW	■ GAS ☐	☐ DECLINING	☐ C. Ex Front ☐ H. VACANCY
☐ SIDEWALKS	☐ ROLLING	■ ELECTRIC ☐	☐ OLD	☐ D. QUANTITY ☐ I. WATER FRONT
☐ CURBS	☐ STANDARD	☐ STANDARD	☐ STANDARD	☐ E. SZ/SHAPE ☐ J. OTHER/CDU

PROPERTY LOCATION
5440 ST RT 219 , COLDWATER

COMMENT
TY2019:Net Gen=$1,602.56, Other Assessment=$6.92
TriDwell=107 TriOB=107 TriLand=107
(Mod ST:)111

LAND COMPUTATIONS

LAND TYPE	SIZE	M RATE C	INF	M VALUE C
HS:Home Site <1 @ 16500*0.75	AC:0.479	12380		13,200 0
Total Acres: .4790			TOTAL	13,200 0

VALUATION SUMMARY

		2020	2017	2014	2013	2011			
VALUE YEAR		2020	2017	2014	2013	2011			
REASON FOR CHANGE		RAPP	RAPP	RAPP	MISC	RAPP			
APPRAISED VALUE	LAND	13,200	12,400	12,900	11,300	11,300			
	IMPR	129,700	113,200	91,300	79,500	79,500			
	TOTAL	142,900	125,600	104,200	90,800	90,800			
ASSESSED VALUE	LAND	4,620	4,340	4,520	3,960	3,960			
	IMPR	45,400	39,620	31,960	27,830	27,830			
	TOTAL	50,020	43,960	36,480	31,790	31,790			

OCCUPANCY	EXTERIOR
■SF ☐DU ☐TR	☐ WOOD
☐CONVERSION	☐ STUCCO
BUILDING TYPE	■ ALM/VYNL
☐ MOBILE HOME	☐ CONC BLK
☐ BI/TR LEVEL	☐ METAL
☐ MOD/MAN	☐ BRICK
☐ _____	☐ STONE

ROOFING	ROOF TYPE
☐ METAL	■ GABLE
☐ SLT/TLE	☐ HIP
■ SHINGLES	☐ GAMBREL
☐ SHAKES	☐ MANSARD
☐ COMPOSITE	☐ FLAT

FLOORS	B	1	2	3	U
CONCRETE	■	☐	☐	☐	☐
WOOD	☐	☐	☐	☐	☐
TILE/COMPO	☐	■	☐	☐	☐
CARPET	☐	☐	■	☐	☐

INT. FINISH	B	1	2	3	U
PLASTER/DW	☐	■	■	☐	☐
PANELING	☐	☐	☐	☐	☐
UNFINISHED	☐	☐	☐	☐	☐

ACCOMMODATIONS					
# OF ROOMS		4	2		
BEDROOMS		1	2		
FIREPLACES					

HEAT & AC	B	1	2	3	U
NO HEAT	☐	☐	☐	☐	☐
CTRL HEAT	■	■	■	☐	☐
HW/STEAM	☐	☐	☐	☐	☐
ELECTRIC	☐	☐	☐	☐	☐
HEAT PUMP	☐	☐	☐	☐	☐
FLR/WALL	☐	☐	☐	☐	☐
STVE/SPCE	☐	☐	☐	☐	☐
GEOTHERMAL	☐	☐	☐	☐	☐
OUTSIDE	☐	☐	☐	☐	☐
CTRL A/C	■	■	■	☐	☐

PLUMBING		BASE ■			
X FULL BATH		1			
X HALF BATH					
X FIXTURES					

FLOOR	AREA	CONST	VALUE
1	1064	FR	97,440
.25	266	FR	18,510
BSMT	1064		13,830
SUBTOTAL			129,780
MULTI-FAMILY #	0		0
BUILDING TYPE	100%		0
BSMT FINISH	532 S.F.		6,920
FIREPLACE #	0		0
HEATING	0 S.F.		0
AIR COND	1,862 S.F.		2,800
PLUMBING #	3		3,300
GARAGES & CARPORTS			10,300
EXTRA FEATURES			5,200
SUBTOTAL			0
GRADE FACTOR			107 %
UNADJUSTED VALUE			181,240
FACTOR			100 %

SKETCH

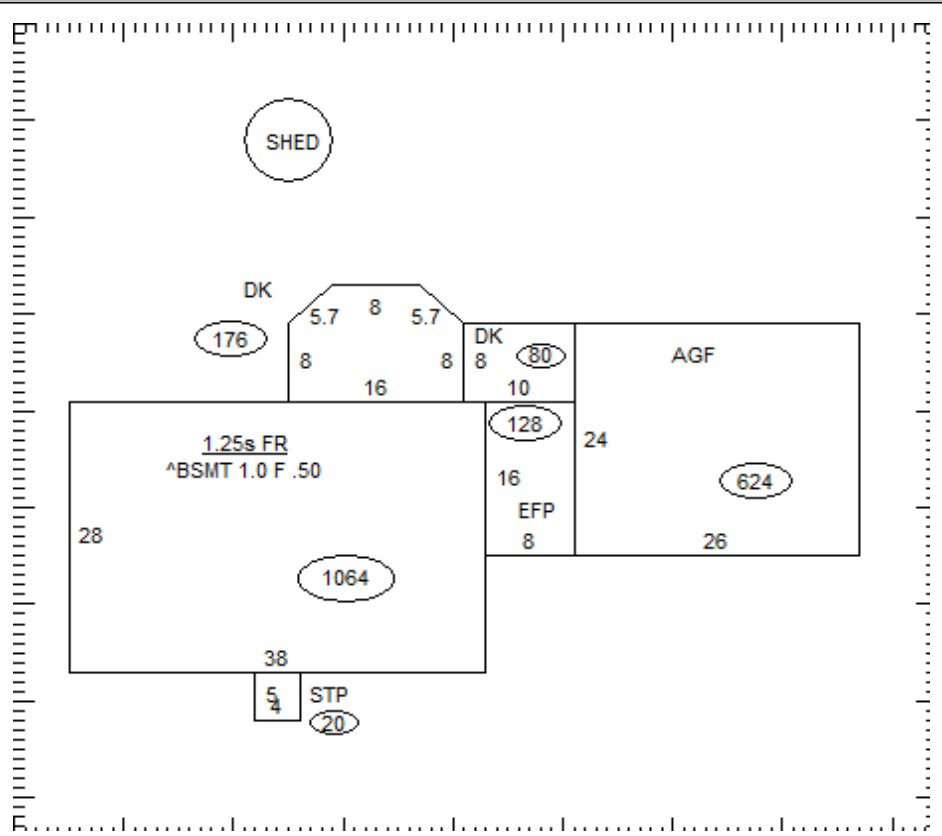

OCCUPANCY	ST.HT	SIZE	AREA	GRADE	PRICE	AGE	REMD	CND	UNADJ VAL	PHYS	PHYS VAL	FUNC	TRUE VAL
DWELLING	1.25	SK	1,330	C		1954		A	181,240	42	105,120		129,300
1 Shed	10	0x0	448	C	7.49	1954		A	3,590	90	360		400
2													
3													
4													
5													
6													
7													
8													
9													
10													
11													

03-020200.0000

TOTAL 129,700

COMMENTS

Dwelling has an Economic Factor of 123%