20-040800.0000

GRANVILLE TWP / ST HENRY SD

11-26-100-002

PROP. CLASS		
5	1	0

NEIGHBORHOOD	
009205-R150	
M	14
B	
C	09

KOESTERS NATHAN A & KARA M

KOESTERS NATHAN A & KARA M
5038 ST RTE 119
SAINT HENRY, OH 45883

LEGAL INFORMATION

NW COR NW
EX NW COR
RTS: 002-07-26
Acres:1.3220

	OWNERSHIP	ADDRESS	CITY	STATE	ZIP	DATE	AMOUNT	DEED:CONV#	JS	VALID
1	KOESTERS NATHAN A & KARA	5038 ST RTE 119	SAINT HENRY	OH	45883	10/18/2018	315,000	WDC : 812	☐	■
2	CLUNE DAVID R & JANICE M	5038 ST RT 119	ST HENRY	OH	45883	06/14/1983	0	: 0	☐	☐
3							0	0	☐	☐

X: ☐ TTO LISTER: RK DATE: 03/16/2005 TIME: 12:00:00 AM ☐ LETTER ☐ LETTER REC'D GIS CODE

STREET/ROAD	TOPOGRAPHY	PU-UTILITIES-PR		NEIGHBORHOOD	INFLUENCE FACTORS	
■ PAVED	■ LEVEL	☐ WATER	☐	☐ IMPROVING	☐ A. NO ROAD	☐ F. RESTRICT
☐ GRAVEL	☐ HIGH	☐ SEWER	☐	■ STATIC	☐ B. TOPGRHY	☐ G. WOOD LT
☐ DIRT	☐ LOW	☐ GAS	☐	☐ DECLINING	☐ C. Ex Front	☐ H. VACANCY
☐ SIDEWALKS	☐ ROLLING	☐ ELECTRIC	☐	☐ OLD	☐ D. QUANTITY	☐ I. WATER FRONT
☐ CURBS	☐ STANDARD	■ STANDARD		☐ STANDARD	☐ E. SZ/SHAPE	☐ J. OTHER/CDU

PROPERTY LOCATION

5038 ST RT 119 , ST HENRY

COMMENT

TY2018:Net Gen=$3,640.16, Other Assessment=$0.00
DE 05 Remove wddk belongs to neighbor, Change size of CPAT
DE17 DESKTOP REVIEW//CORR DWELL & PATIO MSMTS

LAND COMPUTATIONS

LAND TYPE	SIZE	M RATE C	INF	M VALUE C
HS:Home Site	AC:1	16500		16,500 0
SM:Small Acreage	AC:0.322	7000		2,300 0
Total Acres: 1.3220			TOTAL	18,800 0

VALUATION SUMMARY

VALUE YEAR		2017	2017	2017	2014	2013	2011		
REASON FOR CHANGE		RAPP	MISC	MISC	RAPP	MISC	RAPP		
APPRAISED VALUE	LAND	18,800	18,900	18,900	18,900	17,300	17,200		
	IMPR	241,200	228,400	228,300	228,100	209,300	209,300		
	TOTAL	260,000	247,300	247,200	247,000	226,600	226,500		
ASSESSED VALUE	LAND	6,580	6,620	6,620	6,620	6,060	6,020		
	IMPR	84,420	79,940	79,910	79,840	73,260	73,260		
	TOTAL	91,000	86,560	86,530	86,460	79,320	79,280		

OCCUPANCY	EXTERIOR
■ SNGL FMLY	☐ WOOD
☐ DUPLEX	☐ STUCCO
☐ TRIPLEX	☐ ALM/VYNL
☐ CONVR	☐ CONC BLK
☐ MOBILE HM	☐ METAL
☐ BI/L TRI/L	■ BRICK
☐ MOD/MAN	☐ STONE

ROOFING	ROOF TYPE
☐ METAL	■ GABLE
☐ SLT/TLE	☐ HIP
■ SHINGLES	☐ GAMBREL
☐ SHAKES	☐ MANSARD
☐ COMPOSITE	☐ FLAT

FLOORS	B	1	2	3	U
CONCRETE	■	☐	☐	☐	☐
WOOD	☐	☐	☐	☐	☐
TILE/COMPO	☐	■	☐	☐	☐
CARPET	☐	■	☐	☐	☐

INT. FINISH	B	1	2	3	U
PLASTER/DW	☐	■	☐	☐	☐
PANELING	☐	☐	☐	☐	☐
UNFINISHED	☐	☐	☐	☐	☐

ACCOMMODATIONS	B	1	2	3	U
# OF ROOMS	1	6			
BEDROOMS		3			
FIREPLACES					

HEAT & AC	B	1	2	3	U
NO HEAT	☐	☐	☐	☐	☐
CTRL HEAT	☐	■	☐	☐	☐
HW/STEAM	☐	☐	☐	☐	☐
ELECTRIC	☐	☐	☐	☐	☐
HEAT PUMP	☐	☐	☐	☐	☐
FLR/WALL	☐	☐	☐	☐	☐
STVE/SPCE	☐	☐	☐	☐	☐
GEOTHERMAL	☐	☐	☐	☐	☐
OUTSIDE	☐	☐	☐	☐	☐
CTRL A/C	☐	■	☐	☐	☐

PLUMBING					BASE ■
X FULL BATH					
X HALF BATH		2			
X FIXTURES		1			

FLOOR	AREA	CONST	VALUE
1	2208	BRK	159,020
BSMT	2208		28,700
SUBTOTAL			187,720
MULTI-FAMILY #	0		0
BSMT FINISH	0 S.F.		0
FIREPLACE #	0		0
HEATING	0 S.F.		0
AIR COND	2,208 S.F.		3,310
PLUMBING #	5		5,500
GARAGES & CARPORTS			21,200
EXTRA FEATURES			4,900
SUBTOTAL			222,630
GRADE FACTOR			105 %
UNADJUSTED VALUE			233,760
FACTOR			100 %

SKETCH

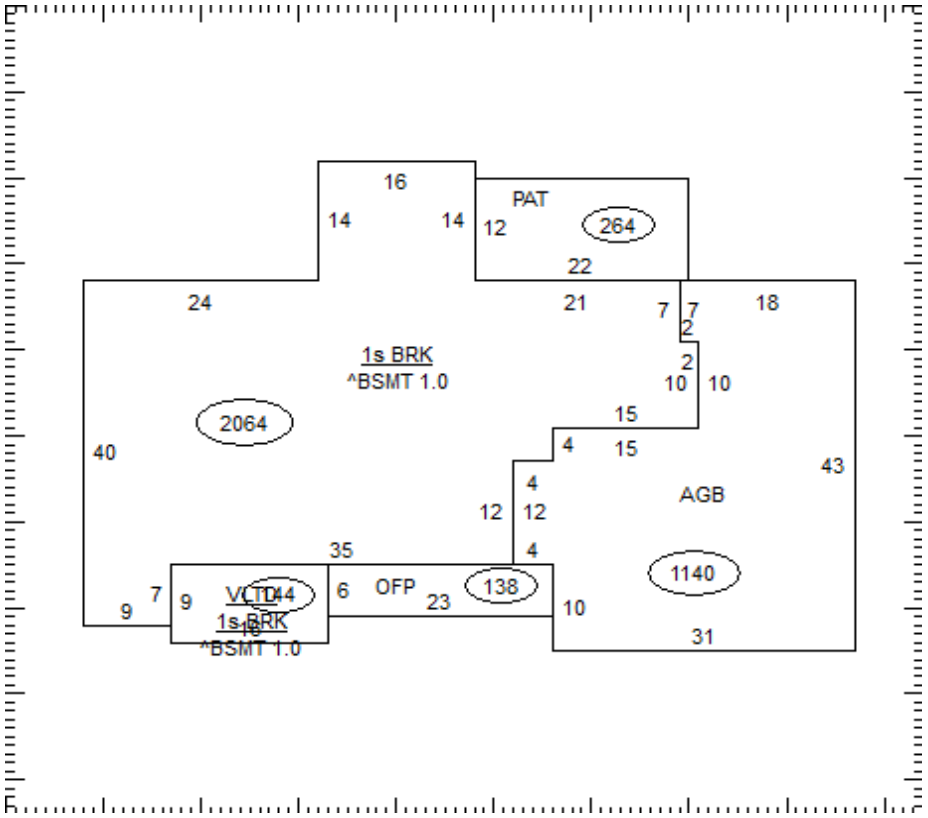

OCCUPANCY	ST.HT	SIZE	AREA	GRADE	PRICE	AGE	REMD	CND	UNADJ VAL	PHYS	PHYS VAL	FUNC	TRUE VAL
DWELLING	1	SK	2,208	C+		1997		A	233,760	20	187,010		241,200
1													
2													
3													
4													
5													
6													
7													
8													
9													
10													
11													
											TOTAL		241,200

20-040800.0000

COMMENTS

GEOTHERMAL HEAT DECK ON POND
Dwelling has an Economic Factor of 129%