09-033000.3600

FRANKLIN TWP / CELINA SD

09-20-282-023

PROP. CLASS		
5	1	0

NEIGHBORHOOD	
095CL50-CL50	
M	05 E
B	
C	98

KEMPER SHALANDA & RANLY TYLER
KEMPER SHALANDA & RANLY TYLER
5364 STILLWATER LN
CELINA, OH 45822

LEGAL INFORMATION
SOUTH POINTE SUBD
SECOND ADDITON
LOT# : 34

	OWNERSHIP	ADDRESS	CITY	STATE	ZIP	DATE	AMOUNT	DEED:CONV#	JS	VALID
1	KEMPER SHALANDA & RANLY ROBERT & PAULA RANLY LIFE ESTATE	5364 STILLWATER LN	CELINA	OH	45822	11/14/2018	0	QCE : X : 0	☐	☐
2	RANLY ROBERT J & PAULA A	5364 STILLWATER LN	CELINA	OH	45822	07/21/2016	170,000	WDC : 489	☐	■
3	TAYLOR JACK D & MELINDA J	5364 STILLWATER LN	CELINA	OH	45822	11/16/2011	165,000	WDC : A : 625	☐	■

X:	☐ TTO	LISTER:	DATE: 04/06/2011	TIME: 12:00:00 AM	☐ LETTER	☐ LETTER REC'D	GIS CODE

STREET/ROAD	TOPOGRAPHY	PU-UTILITIES-PR		NEIGHBORHOOD	INFLUENCE FACTORS	
■ PAVED	■ LEVEL	☐ WATER	☐	■ IMPROVING	☐ A. NO ROAD	☐ F. RESTRICT
☐ GRAVEL	☐ HIGH	☐ SEWER	☐	☐ STATIC	☐ B. TOPGRHY	☐ G. WOOD LT
☐ DIRT	☐ LOW	☐ GAS	☐	☐ DECLINING	☐ C. Ex Front	☐ H. VACANCY
☐ SIDEWALKS	☐ ROLLING	☐ ELECTRIC	☐	☐ OLD	☐ D. QUANTITY	☐ I. WATER FRONT
☐ CURBS	☐ STANDARD	■ STANDARD		☐ STANDARD	☐ E. SZ/SHAPE	☐ J. OTHER/CDU

PROPERTY LOCATION
5364 STILLWATER LN,

COMMENT
TY2018:Net Gen=$2,275.28, Other Assessment=$0.00
DE17 ADD OFP/PER DESKTOP RVW
DE11 CORR SKETCH
DE10 TTO; CORR TO SLAB,ADJ GAR MSMNTS
CHANNEL LOT
CORNER LOT

LAND COMPUTATIONS

LAND TYPE	SIZE	M RATE C	INF	M VALUE C
F:Front	F70 D79	ST500 DP73 ADJ365		25,600 0
			TOTAL	25,600 0

VALUATION SUMMARY

VALUE YEAR		2017	2017	2014	2011	2011	2010		
REASON FOR CHANGE		RAPP	MISC	RAPP	RAPP	MISC	MISC		
APPRAISED VALUE	LAND	25,600	25,600	25,600	25,600	25,600	25,600		
	IMPR	122,400	132,900	132,100	132,100	128,100	130,700		
	TOTAL	148,000	158,500	157,700	157,700	153,700	156,300		
ASSESSED VALUE	LAND	8,960	8,960	8,960	8,960	8,960	8,960		
	IMPR	42,840	46,520	46,240	46,240	44,840	45,750		
	TOTAL	51,800	55,480	55,200	55,200	53,800	54,710		

OCCUPANCY	EXTERIOR
■ SNGL FMLY	■ WOOD
☐ DUPLEX	☐ STUCCO
☐ TRIPLEX	☐ ALM/VYNL
☐ CONVR	☐ CONC BLK
☐ MOBILE HM	☐ METAL
☐ BI/L TRI/L	☐ BRICK
☐ MOD/MAN	☐ STONE

ROOFING	ROOF TYPE
☐ METAL	■ GABLE
☐ SLT/TLE	☐ HIP
■ SHINGLES	☐ GAMBREL
☐ SHAKES	☐ MANSARD
☐ COMPOSITE	☐ FLAT

FLOORS	B	1	2	3	U
CONCRETE	☐	☐	☐	☐	☐
WOOD	☐	☐	☐	☐	☐
TILE/COMPO	☐	■	☐	☐	☐
CARPET	☐	■	☐	☐	☐

INT. FINISH	B	1	2	3	U
PLASTER/DW	☐	■	☐	☐	☐
PANELING	☐	☐	☐	☐	☐
UNFINISHED	☐	☐	☐	☐	☐

ACCOMMODATIONS					
# OF ROOMS		5			
BEDROOMS		2			
FIREPLACES		1			

HEAT & AC	B	1	2	3	U
NO HEAT	☐	☐	☐	☐	☐
CTRL HEAT	☐	■	☐	☐	☐
HW/STEAM	☐	☐	☐	☐	☐
ELECTRIC	☐	☐	☐	☐	☐
HEAT PUMP	☐	☐	☐	☐	☐
FLR/WALL	☐	☐	☐	☐	☐
STVE/SPCE	☐	☐	☐	☐	☐
GEOTHERMAL	☐	☐	☐	☐	☐
OUTSIDE	☐	☐	☐	☐	☐
CTRL A/C	☐	■	☐	☐	☐

PLUMBING					BASE ■
X FULL BATH		1			
X HALF BATH					
X FIXTURES					

FLOOR	AREA	CONST	VALUE
1	1407	FR	110,670

SUBTOTAL			110,670
MULTI-FAMILY #	0		0
BSMT FINISH	0	S.F.	0
FIREPLACE #	1		4,000
HEATING	0	S.F.	0
AIR COND	1,407	S.F.	2,110
PLUMBING #	3		3,300
GARAGES & CARPORTS			9,500
EXTRA FEATURES			9,200
SUBTOTAL			138,780
GRADE FACTOR			100 %
UNADJUSTED VALUE			138,780
FACTOR			100 %

SKETCH

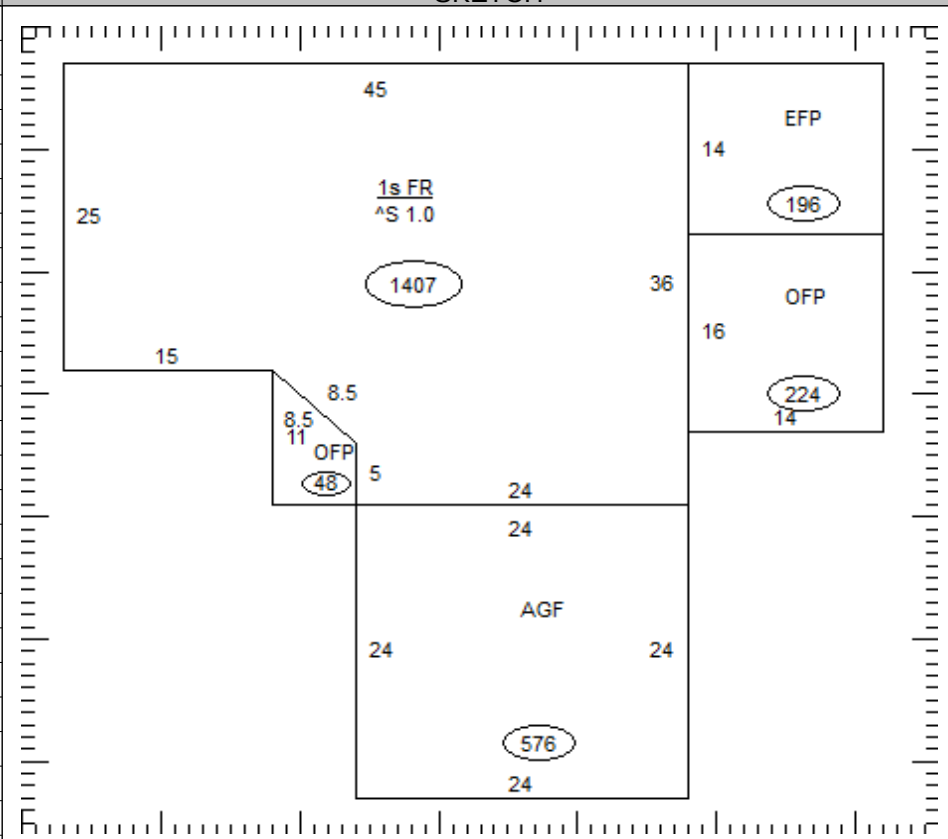

OCCUPANCY	ST.HT	SIZE	AREA	GRADE	PRICE	AGE	REMD	CND	UNADJ VAL	PHYS	PHYS VAL	FUNC	TRUE VAL
DWELLING	1	SK	1,407	C		2006		A	138,780	10	124,900		122,400
1													
2													
3													
4													
5													
6													
7													
8													
9													
10													
11													
												TOTAL	122,400

09-033000.3600

COMMENTS

Dwelling has an Economic Factor of 98%

09-033000.3600

FRANKLIN TWP / CELINA SD

09-20-282-023

PROP. CLASS		
5	1	0

NEIGHBORHOOD	
095CL50-CL50	
M	05 E
B	
C	98

KEMPER SHALANDA & RANLY TYLER
KEMPER SHALANDA & RANLY TYLER
5364 STILLWATER LN
CELINA, OH 45822

LEGAL INFORMATION
SOUTH POINTE SUBD
SECOND ADDITON
LOT# : 34

	OWNERSHIP	ADDRESS	CITY	STATE	ZIP	DATE	AMOUNT	DEED:CONV#	JS	VALID
1	BIGGS CECIL L & BARBARA L	5364 STILLWATER LN	CELINA	OH	45822	05/03/2004	43,000	WDC : 0	☐	☐
2	JELA CORP	909 E WAYNE ST APT/SUITE STE	CELINA	OH	45822	12/21/1999	0	: 0	☐	☐
3							0	0	☐	☐

X: ☐ TTO LISTER: DATE: 04/06/2011 TIME: 12:00:00 AM ☐ LETTER ☐ LETTER REC'D GIS CODE

STREET/ROAD	TOPOGRAPHY	PU-UTILITIES-PR		NEIGHBORHOOD	INFLUENCE FACTORS	
■ PAVED	■ LEVEL	☐ WATER	☐	■ IMPROVING	☐ A. NO ROAD	☐ F. RESTRICT
☐ GRAVEL	☐ HIGH	☐ SEWER	☐	☐ STATIC	☐ B. TOPGRHY	☐ G. WOOD LT
☐ DIRT	☐ LOW	☐ GAS	☐	☐ DECLINING	☐ C. Ex Front	☐ H. VACANCY
☐ SIDEWALKS	☐ ROLLING	☐ ELECTRIC	☐	☐ OLD	☐ D. QUANTITY	☐ I. WATER FRONT
☐ CURBS	☐ STANDARD	■ STANDARD		☐ STANDARD	☐ E. SZ/SHAPE	☐ J. OTHER/CDU

PROPERTY LOCATION
5364 STILLWATER LN,

COMMENT

LAND COMPUTATIONS

LAND TYPE	SIZE	M	RATE	C	INF	M	VALUE	C
					TOTAL		25,600	0

VALUATION SUMMARY

VALUE YEAR									
REASON FOR CHANGE									
APPRAISED VALUE	LAND								
	IMPR								
	TOTAL								
ASSESSED VALUE	LAND								
	IMPR								
	TOTAL								

OCCUPANCY	EXTERIOR
☐ SNGL FMLY	☐ WOOD
☐ DUPLEX	☐ STUCCO
☐ TRIPLEX	☐ ALM/VYNL
☐ CONVR	☐ CONC BLK
☐ MOBILE HM	☐ METAL
☐ BI/L TRI/L	☐ BRICK
☐ MOD/MAN	☐ STONE

ROOFING	ROOF TYPE
☐ METAL	☐ GABLE
☐ SLT/TLE	☐ HIP
☐ SHINGLES	☐ GAMBREL
☐ SHAKES	☐ MANSARD
☐ COMPOSITE	☐ FLAT

FLOORS	B	1	2	3	U
CONCRETE	☐	☐	☐	☐	☐
WOOD	☐	☐	☐	☐	☐
TILE/COMPO	☐	☐	☐	☐	☐
CARPET	☐	☐	☐	☐	☐

INT. FINISH	B	1	2	3	U
PLASTER/DW	☐	☐	☐	☐	☐
PANELING	☐	☐	☐	☐	☐
UNFINISHED	☐	☐	☐	☐	☐

ACCOMMODATIONS					
# OF ROOMS					
BEDROOMS					
FIREPLACES					

HEAT & AC	B	1	2	3	U
NO HEAT	☐	☐	☐	☐	☐
CTRL HEAT	☐	☐	☐	☐	☐
HW/STEAM	☐	☐	☐	☐	☐
ELECTRIC	☐	☐	☐	☐	☐
HEAT PUMP	☐	☐	☐	☐	☐
FLR/WALL	☐	☐	☐	☐	☐
STVE/SPCE	☐	☐	☐	☐	☐
GEOTHERMAL	☐	☐	☐	☐	☐
OUTSIDE	☐	☐	☐	☐	☐
CTRL A/C	☐	☐	☐	☐	☐

PLUMBING					BASE ☐
X FULL BATH					
X HALF BATH					
X FIXTURES					

FLOOR	AREA	CONST	VALUE

SUBTOTAL		0
MULTI-FAMILY #	0	0
BSMT FINISH	0 S.F.	0
FIREPLACE #	0	0
HEATING	0 S.F.	0
AIR COND	0 S.F.	0
PLUMBING #	0	0
GARAGES & CARPORTS		0
EXTRA FEATURES		0
SUBTOTAL		0
GRADE FACTOR		%
UNADJUSTED VALUE		0
FACTOR		%

SKETCH

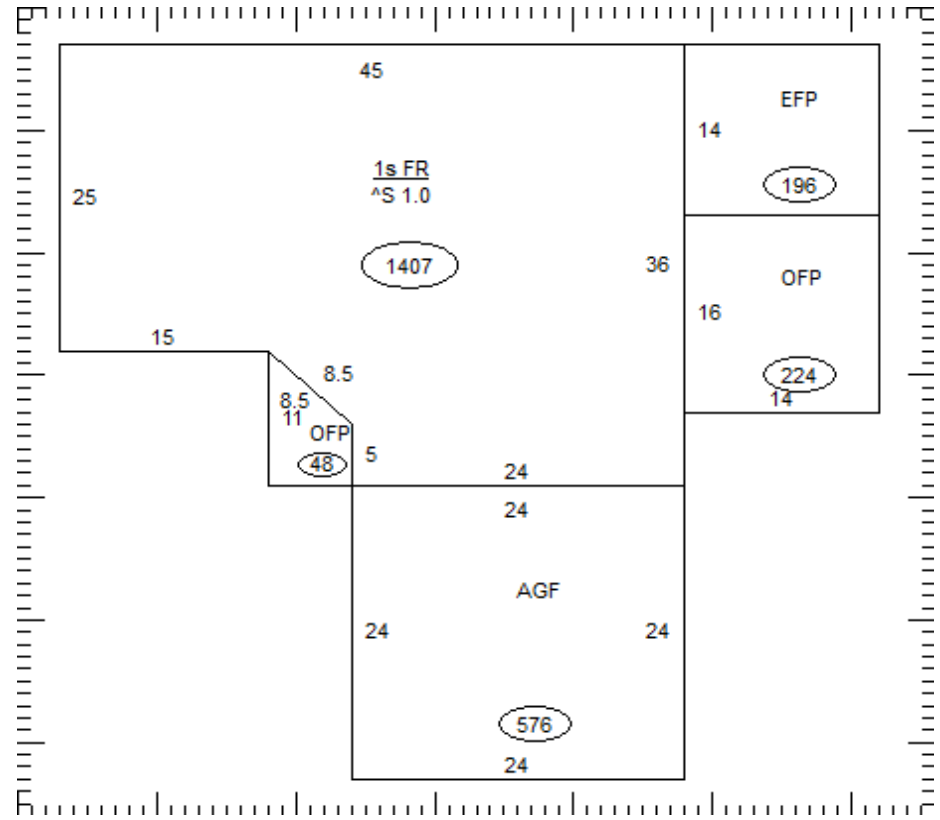

OCCUPANCY	ST.HT	SIZE	AREA	GRADE	PRICE	AGE	REMD	CND	UNADJ VAL	PHYS	PHYS VAL	FUNC	TRUE VAL
DWELLING		SK											
1													
2													
3													
4													
5													
6													
7													
8													
9													
10													
11													
												TOTAL	0

09-033000.3600

COMMENTS