09-000200.0100

KELLY REBECCA K
KELLY REBECCA K
5565 HIDDEN SHORES DR
CELINA, OH 45822

FRANKLIN TWP / CELINA SD

09-16-379-004

LEGAL INFORMATION
S SD S 1/2 SW

RTS: 003-06-16
Acres:0.4640 M:0.0000

PROP. CLASS		
5	1	0

NEIGHBORHOOD	
095LF80-LF80	
M	04
B	
C	134

	OWNERSHIP	ADDRESS	CITY	STATE	ZIP	DATE	AMOUNT	DEED:CONV#	JS	VALID
1	KELLY REBECCA K	5565 HIDDEN SHORES DR	CELINA	OH	45822	06/07/2017	475,000	WDC : 374	☐	■
2	HOMAN ROBERT B &	5565 W HIDDEN SHORES DR	CELINA	OH	45822 -0	08/31/2001	155,000	: A : 0	☐	■
3							0	0	☐	☐

X: Signature | ☐ TTO | LISTER: KK | DATE: 06/16/2003 | TIME: 12:53:50 PM | ■ LETTER | ☐ LETTER REC'D | GIS CODE

STREET/ROAD	TOPOGRAPHY	PU-UTILITIES-PR	NEIGHBORHOOD	INFLUENCE FACTORS	
■ PAVED	■ LEVEL	☐ WATER ☐	☐ IMPROVING	☐ A. NO ROAD	☐ F. RESTRICT
☐ GRAVEL	☐ HIGH	☐ SEWER ☐	■ STATIC	☐ B. TOPGRHY	☐ G. WOOD LT
☐ DIRT	☐ LOW	☐ GAS ☐	☐ DECLINING	☐ C. Ex Front	☐ H. VACANCY
☐ SIDEWALKS	☐ ROLLING	☐ ELECTRIC ☐	☐ OLD	☐ D. QUANTITY	☐ I. WATER FRONT
☐ CURBS	☐ STANDARD	■ STANDARD	☐ STANDARD	☐ E. SZ/SHAPE	☐ J. OTHER/CDU

PROPERTY LOCATION
5565 W HIDDEN SHORES DR, CELINA

COMMENT
TY2018:Net Gen=$7,470.94, Other Assessment=$0.00
DE11 CHANGE SKETCH & COND & GRD
DE17 DESKTOP REVIEW//CORR SKETCH; ADD PATIO, OFP
BOR 17-69 HEARING; REDUCE VALUE TO PURCHASE PRICE $475,000, C.A.M.P.
(Mod SM:)200

LAND COMPUTATIONS

LAND TYPE	SIZE	M RATE C	INF	M VALUE C
F:Front	F120 D188	ST1600 DP111 ADJ1776		213,100 0
			TOTAL	213,100 0

VALUATION SUMMARY

VALUE YEAR		2018	2017	2017	2017	2014	2011		
REASON FOR CHANGE		BOR	RAPP	MISC	MISC	RAPP	RAPP		
APPRAISED VALUE	LAND	213,100	213,100	213,100	213,100	213,100	213,100		
	IMPR	260,000	273,200	331,000	330,100	324,500	324,500		
	TOTAL	473,100	486,300	544,100	543,200	537,600	537,600		
ASSESSED VALUE	LAND	74,590	74,590	74,590	74,590	74,590	74,590		
	IMPR	91,000	95,620	115,850	115,540	113,580	113,580		
	TOTAL	165,590	170,210	190,440	190,130	188,170	188,170		

OCCUPANCY	EXTERIOR
■ SNGL FMLY	■ WOOD
☐ DUPLEX	☐ STUCCO
☐ TRIPLEX	☐ ALM/VYNL
☐ CONVR	☐ CONC BLK
☐ MOBILE HM	☐ METAL
☐ BI/L TRI/L	■ BRICK
☐ MOD/MAN	■ STONE

ROOFING	ROOF TYPE
☐ METAL	■ GABLE
☐ SLT/TLE	☐ HIP
■ SHINGLES	☐ GAMBREL
☐ SHAKES	☐ MANSARD
☐ COMPOSITE	☐ FLAT

FLOORS	B	1	2	3	U
CONCRETE	☐	■	☐	☐	☐
WOOD	☐	■	☐	☐	☐
TILE/COMPO	☐	☐	■	☐	☐
CARPET	☐	■	■	☐	☐

INT. FINISH	B	1	2	3	U
PLASTER/DW	☐	■	■	☐	☐
PANELING	☐	☐	☐	☐	☐
UNFINISHED	☐	☐	☐	☐	☐

ACCOMMODATIONS					
# OF ROOMS		7	5		
BEDROOMS		2	2		
FIREPLACES		1			

HEAT & AC	B	1	2	3	U
NO HEAT	☐	☐	☐	☐	☐
CTRL HEAT	☐	■	■	☐	☐
HW/STEAM	☐	☐	☐	☐	☐
ELECTRIC	☐	☐	☐	☐	☐
HEAT PUMP	☐	☐	☐	☐	☐
FLR/WALL	☐	☐	☐	☐	☐
STVE/SPCE	☐	☐	☐	☐	☐
GEOTHERMAL	☐	☐	☐	☐	☐
OUTSIDE	☐	☐	☐	☐	☐
CTRL A/C	☐	■	■	☐	☐

PLUMBING		BASE ■			
X FULL BATH		1	1		
X HALF BATH		1			
X FIXTURES		1			

FLOOR	AREA	CONST	VALUE
1	2278	BRK	164,060
2ND	919	FR	29,690
+	0	FR	2,640

SUBTOTAL			196,390
MULTI-FAMILY #	0		0
BSMT FINISH	0	S.F.	0
FIREPLACE #	1		4,000
HEATING	0	S.F.	0
AIR COND	3,197	S.F.	4,800
PLUMBING #	9		9,900
GARAGES & CARPORTS			0
EXTRA FEATURES			21,130
SUBTOTAL			236,220
GRADE FACTOR			150 %
UNADJUSTED VALUE			354,330
FACTOR			100 %

SKETCH

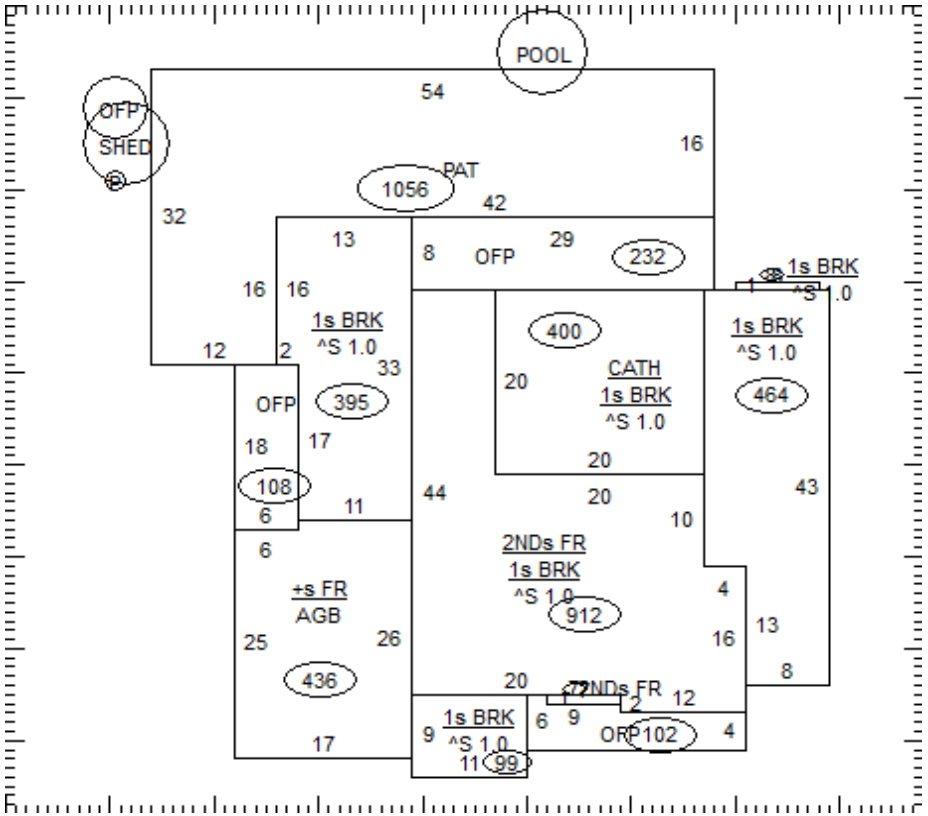

OCCUPANCY	ST.HT	SIZE	AREA	GRADE	PRICE	AGE	REMD	CND	UNADJ VAL	PHYS	PHYS VAL	FUNC	TRUE VAL
DWELLING	2	SK	3,197	A		2002		A	354,330	13	308,270	BOR5	251,900
1 Pool - Inground		16x35	560	C	25.00	2002		A	14,000	25	10,500	DFLT30	7,400
2 Shed	5	9x13	117	C		2002		A		25			0
3 Patio		10x12	120	C	2.70	2002		A	320	25	240		200
4 OFP		5x9	45	C	14.58	2002		A	660	25	500		500
5													
6													
7													
8													
9													
10													
11													
											TOTAL		260,000

09-000200.0100

COMMENTS

Dwelling has an Economic Factor of 86%