08-017300.0000

DULL RYAN M
DULL RYAN M
206 E SECOND ST
ROCKFORD, OH 45882

DUBLIN TWP-ROCKFORD CORP / PARKWAY SD
02-16-354-002

LEGAL INFORMATION
EHRET ADDITION

LOT#: 117

PROP. CLASS		
5	1	0

NEIGHBORHOOD	
000802-TM50	
M	09
B	
C	115

	OWNERSHIP	ADDRESS	CITY	STATE	ZIP	DATE	AMOUNT	DEED:CONV#	JS	VALID
1	DULL RYAN M	206 E SECOND ST	ROCKFORD	OH	45882	05/10/2019	85,000	WDC : 304	☐	■
2	SECAUR JEFFREY A	206 E SECOND ST	ROCKFORD	OH	45882	10/07/2013	53,500	WDC : 674	☐	☐
3	WELLS FARGO BANK NA	3476 STATEVIEW BOULEVARD	FORT MILL	SC	29715	12/20/2012	30,000	SHC : 825	☐	☐

X: ☐ TTO LISTER: RK DATE: 02/21/2017 TIME: 12:00:00 AM ☐ LETTER ☐ LETTER REC'D GIS CODE

STREET/ROAD	TOPOGRAPHY	PU-UTILITIES-PR	NEIGHBORHOOD	INFLUENCE FACTORS	
■ PAVED	☐ LEVEL	☐ WATER ☐	☐ IMPROVING	☐ A. NO ROAD	☐ F. RESTRICT
☐ GRAVEL	■ HIGH	☐ SEWER ☐	■ STATIC	☐ B. TOPGRHY	☐ G. WOOD LT
☐ DIRT	☐ LOW	☐ GAS ☐	☐ DECLINING	☐ C. Ex Front	☐ H. VACANCY
☐ SIDEWALKS	☐ ROLLING	☐ ELECTRIC ☐	☐ OLD	☐ D. QUANTITY	☐ I. WATER FRONT
☐ CURBS	☐ STANDARD	■ STANDARD	☐ STANDARD	☐ E. SZ/SHAPE	☐ J. OTHER/CDU

PROPERTY LOCATION
206 E SECOND ST, ROCKFORD

COMMENT
TY2018:Net Gen=$1,017.62, Other Assessment=$2.00
DE17 TTO/ RMV CPY, ADD GAR & SHED
DE16 DESKTOP REVIEW CHGS: chg shed to cpy
DE15 CORR BSMNT, RMV CAR SHED PER DATA MAILER

LAND COMPUTATIONS

LAND TYPE	SIZE	M RATE C	INF	M VALUE C
F:Front	F66 D132	ST210 DP94 ADJ197		13,000 0
			TOTAL	13,000 0

VALUATION SUMMARY

VALUE YEAR		2017	2016	2014	2011				
REASON FOR CHANGE		NC	MISC	RAPP	RAPP				
APPRAISED VALUE	LAND	13,000	12,600	12,600	13,700				
	IMPR	57,500	44,600	47,800	52,000				
	TOTAL	70,500	57,200	60,400	65,700				
ASSESSED VALUE	LAND	4,550	4,410	4,410	4,800				
	IMPR	20,130	15,610	16,730	18,200				
	TOTAL	24,680	20,020	21,140	23,000				

OCCUPANCY	EXTERIOR
■ SNGL FMLY	■ WOOD
☐ DUPLEX	☐ STUCCO
☐ TRIPLEX	☐ ALM/VYNL
☐ CONVR	☐ CONC BLK
☐ MOBILE HM	☐ METAL
☐ BI/L TRI/L	☐ BRICK
☐ MOD/MAN	☐ STONE

ROOFING	ROOF TYPE
☐ METAL	■ GABLE
☐ SLT/TLE	☐ HIP
■ SHINGLES	☐ GAMBREL
☐ SHAKES	☐ MANSARD
☐ COMPOSITE	☐ FLAT

FLOORS	B	1	2	3	U
CONCRETE	☐	☐	☐	☐	☐
WOOD	☐	☐	☐	☐	☐
TILE/COMPO	☐	☐	☐	☐	☐
CARPET	☐	■	☐	☐	☐

INT. FINISH	B	1	2	3	U
PLASTER/DW	☐	☐	☐	☐	☐
PANELING	☐	■	☐	☐	☐
UNFINISHED	☐	☐	☐	☐	☐

ACCOMMODATIONS	B	1	2	3	U
# OF ROOMS		6			
BEDROOMS		2			
FIREPLACES					

HEAT & AC	B	1	2	3	U
NO HEAT	☐	☐	☐	☐	☐
CTRL HEAT	☐	☐	☐	☐	☐
HW/STEAM	☐	☐	☐	☐	☐
ELECTRIC	☐	☐	☐	☐	☐
HEAT PUMP	☐	☐	☐	☐	☐
FLR/WALL	☐	■	☐	☐	☐
STVE/SPCE	☐	☐	☐	☐	☐
GEOTHERMAL	☐	☐	☐	☐	☐
OUTSIDE	☐	☐	☐	☐	☐
CTRL A/C	☐	■	☐	☐	☐

PLUMBING					BASE ■
X FULL BATH		1			
X HALF BATH					
X FIXTURES					

FLOOR	AREA	CONST	VALUE
1	1276	FR	107,210
BSMT	824		10,710
SUBTOTAL			117,920
MULTI-FAMILY #	0		0
BSMT FINISH	0 S.F.		0
FIREPLACE #	0		0
HEATING	0 S.F.		0
AIR COND	1,276 S.F.		1,910
PLUMBING #	3		3,300
GARAGES & CARPORTS			0
EXTRA FEATURES			8,000
SUBTOTAL			131,130
GRADE FACTOR			95 %
UNADJUSTED VALUE			124,570
FACTOR			100 %

SKETCH

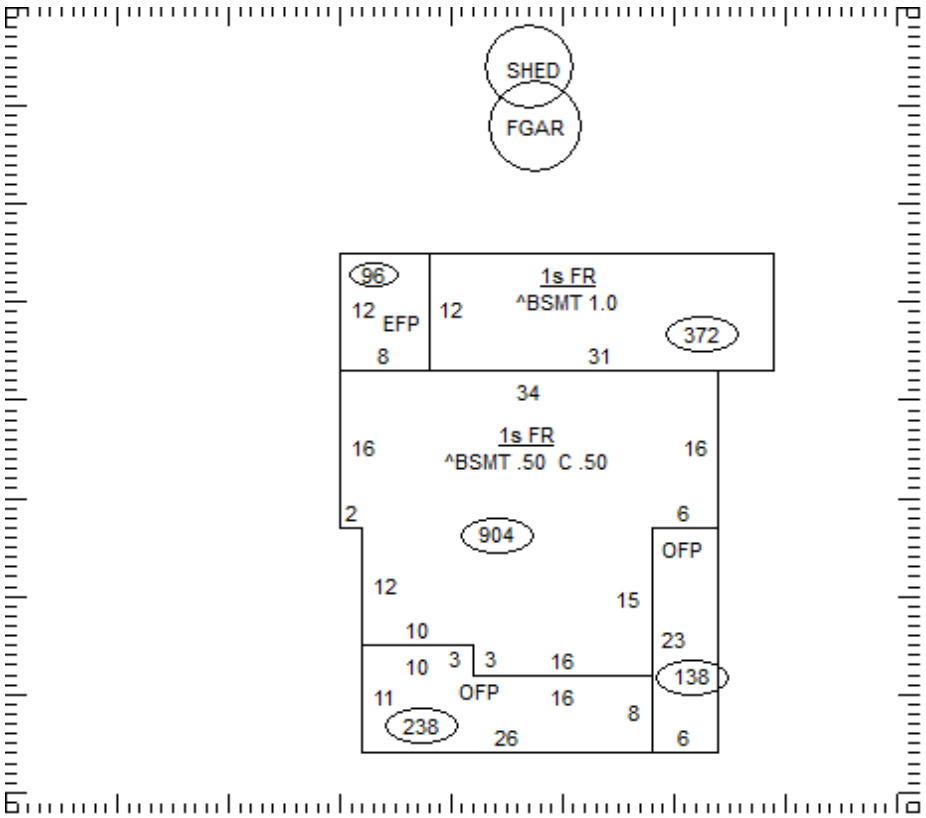

OCCUPANCY	ST.HT	SIZE	AREA	GRADE	PRICE	AGE	REMD	CND	UNADJ VAL	PHYS	PHYS VAL	FUNC	TRUE VAL
DWELLING	1	SK	1,276	C-		1937		A	124,570	45	68,510		48,600
1 Shed		8x10	80	C		2016		A		2			0
2 Gar - Frame		24x24	576	C	15.80	2016		A	9,100	2	8,920		8,900
3													
4													
5													
6													
7													
8													
9													
10													
11													
											TOTAL		57,500

08-017300.0000

COMMENTS

ASBESTOS SIDING
Dwelling has an Economic Factor of 71%

08-017300.0000

DULL RYAN M
DULL RYAN M
206 E SECOND ST
ROCKFORD, OH 45882

DUBLIN TWP-ROCKFORD CORP / PARKWAY SD
02-16-354-002

LEGAL INFORMATION
EHRET ADDITION

LOT#: 117

PROP. CLASS		
5	1	0

NEIGHBORHOOD	
000802-TM50	
M	09
B	
C	115

	OWNERSHIP	ADDRESS	CITY	STATE	ZIP	DATE	AMOUNT	DEED:CONV#	JS	VALID
1	DULL KIRK & SAMANTHA H	206 SECOND ST	ROCKFORD	OH	45882 -9244	03/08/1993	32,000	: A : 0	☐	■
2							0	0	☐	☐
3							0	0	☐	☐

X: ☐ TTO LISTER: RK DATE: 02/21/2017 TIME: 12:00:00 AM ☐ LETTER ☐ LETTER REC'D GIS CODE

STREET/ROAD	TOPOGRAPHY	PU-UTILITIES-PR		NEIGHBORHOOD	INFLUENCE FACTORS	
■ PAVED	☐ LEVEL	☐ WATER	☐	☐ IMPROVING	☐ A. NO ROAD	☐ F. RESTRICT
☐ GRAVEL	■ HIGH	☐ SEWER	☐	■ STATIC	☐ B. TOPGRHY	☐ G. WOOD LT
☐ DIRT	☐ LOW	☐ GAS	☐	☐ DECLINING	☐ C. Ex Front	☐ H. VACANCY
☐ SIDEWALKS	☐ ROLLING	☐ ELECTRIC	☐	☐ OLD	☐ D. QUANTITY	☐ I. WATER FRONT
☐ CURBS	☐ STANDARD	■ STANDARD		☐ STANDARD	☐ E. SZ/SHAPE	☐ J. OTHER/CDU

PROPERTY LOCATION
206 E SECOND ST, ROCKFORD

COMMENT

LAND COMPUTATIONS

LAND TYPE	SIZE	M	RATE	C	INF	M	VALUE	C
					TOTAL		13,000	0

VALUATION SUMMARY

VALUE YEAR									
REASON FOR CHANGE									
APPRAISED VALUE	LAND								
	IMPR								
	TOTAL								
ASSESSED VALUE	LAND								
	IMPR								
	TOTAL								

OCCUPANCY	EXTERIOR
☐ SNGL FMLY	☐ WOOD
☐ DUPLEX	☐ STUCCO
☐ TRIPLEX	☐ ALM/VYNL
☐ CONVR	☐ CONC BLK
☐ MOBILE HM	☐ METAL
☐ BI/L TRI/L	☐ BRICK
☐ MOD/MAN	☐ STONE

ROOFING	ROOF TYPE
☐ METAL	☐ GABLE
☐ SLT/TLE	☐ HIP
☐ SHINGLES	☐ GAMBREL
☐ SHAKES	☐ MANSARD
☐ COMPOSITE	☐ FLAT

FLOORS	B	1	2	3	U
CONCRETE	☐	☐	☐	☐	☐
WOOD	☐	☐	☐	☐	☐
TILE/COMPO	☐	☐	☐	☐	☐
CARPET	☐	☐	☐	☐	☐

INT. FINISH	B	1	2	3	U
PLASTER/DW	☐	☐	☐	☐	☐
PANELING	☐	☐	☐	☐	☐
UNFINISHED	☐	☐	☐	☐	☐

ACCOMMODATIONS					
# OF ROOMS					
BEDROOMS					
FIREPLACES					

HEAT & AC	B	1	2	3	U
NO HEAT	☐	☐	☐	☐	☐
CTRL HEAT	☐	☐	☐	☐	☐
HW/STEAM	☐	☐	☐	☐	☐
ELECTRIC	☐	☐	☐	☐	☐
HEAT PUMP	☐	☐	☐	☐	☐
FLR/WALL	☐	☐	☐	☐	☐
STVE/SPCE	☐	☐	☐	☐	☐
GEOTHERMAL	☐	☐	☐	☐	☐
OUTSIDE	☐	☐	☐	☐	☐
CTRL A/C	☐	☐	☐	☐	☐

PLUMBING	BASE ☐				
X FULL BATH					
X HALF BATH					
X FIXTURES					

FLOOR	AREA	CONST	VALUE
SUBTOTAL			0
MULTI-FAMILY #	0		0
BSMT FINISH	0	S.F.	0
FIREPLACE #	0		0
HEATING	0	S.F.	0
AIR COND	0	S.F.	0
PLUMBING #	0		0
GARAGES & CARPORTS			0
EXTRA FEATURES			0
SUBTOTAL			0
GRADE FACTOR			%
UNADJUSTED VALUE			0
FACTOR			%

SKETCH

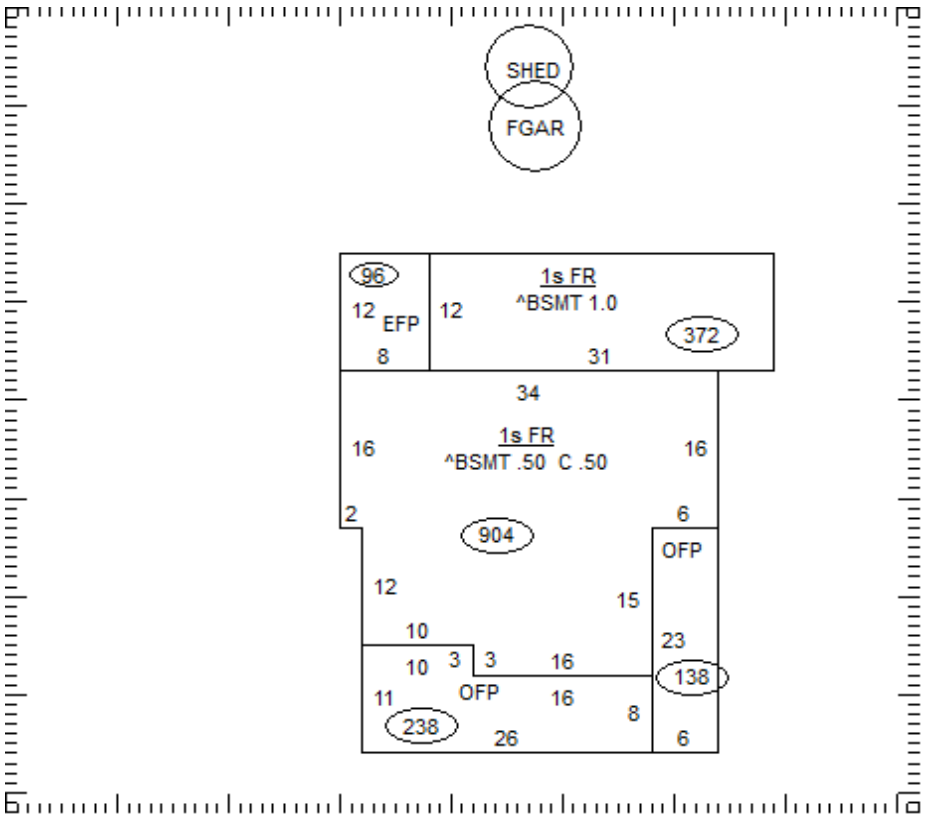

OCCUPANCY	ST.HT	SIZE	AREA	GRADE	PRICE	AGE	REMD	CND	UNADJ VAL	PHYS	PHYS VAL	FUNC	TRUE VAL
DWELLING		SK											
1													
2													
3													
4													
5													
6													
7													
8													
9													
10													
11													
												TOTAL	0

08-017300.0000

COMMENTS

ASBESTOS SIDING