05-066000.0000

**MCCANN KEVIN M & JESSICA L**
MCCANN KEVIN M & JESSICA L
320 E SOUTH ST
COLDWATER, OH 45828

BUTLER TWP-COLDWATER CORP / COLDWATER SD
08-34-110-011

**LEGAL INFORMATION**
FETZERS 2ND ADD

LOT#: 282



| PROP. CLASS | | |
|---|---|---|
| 5 | 1 | 0 |

| NEIGHBORHOOD | |
|---|---|
| 000503-TM50 | |
| M | 14D1 |
| B | |
| C | 67 |

| | OWNERSHIP | ADDRESS | CITY | STATE | ZIP | DATE | AMOUNT | DEED:CONV# | JS | VALID |
|---|---|---|---|---|---|---|---|---|---|---|
| 1 | MCCANN KEVIN M & JESSICA L | 320 E SOUTH ST | COLDWATER | OH | 45828 | 09/28/2018 | 157,900 | WDC : 744 | ☐ | ■ |
| 2 | GROSS JAMES C & MARY S | 320 E SOUTH ST | COLDWATER | OH | 45828 | 06/16/1999 | 97,000 | : A : 0 | ☐ | ■ |
| 3 | | | | | | | 0 | 0 | ☐ | ☐ |

X: ☐ TTO LISTER: NS DATE: 02/04/2005 TIME: 12:00:00 AM ☐ LETTER ■ LETTER REC'D GIS CODE

| STREET/ROAD | TOPOGRAPHY | PU-UTILITIES-PR | NEIGHBORHOOD | INFLUENCE FACTORS | |
|---|---|---|---|---|---|
| ■ PAVED | ■ LEVEL | ☐ WATER ☐ | ☐ IMPROVING | ☐ A. NO ROAD | ☐ F. RESTRICT |
| ☐ GRAVEL | ☐ HIGH | ☐ SEWER ☐ | ■ STATIC | ☐ B. TOPGRHY | ☐ G. WOOD LT |
| ☐ DIRT | ☐ LOW | ☐ GAS ☐ | ☐ DECLINING | ☐ C. Ex Front | ☐ H. VACANCY |
| ■ SIDEWALKS | ☐ ROLLING | ☐ ELECTRIC ☐ | ☐ OLD | ☐ D. QUANTITY | ☐ I. WATER FRONT |
| ☐ CURBS | ☐ STANDARD | ■ STANDARD | ☐ STANDARD | ☐ E. SZ/SHAPE | ☐ J. OTHER/CDU |

PROPERTY LOCATION
320 E SOUTH ST, COLDWATER

COMMENT
TY2018:Net Gen=$1,785.44, Other Assessment=$0.00
DE16 COR FL MISMATCH

LAND COMPUTATIONS

| LAND TYPE | SIZE | M RATE C | INF | M VALUE C |
|---|---|---|---|---|
| F:Front | F50 D132 | ST200 DP94 ADJ188 | | 9,400 0 |
| | | | TOTAL | 9,400 0 |

VALUATION SUMMARY

| | | | | | | | | | |
|---|---|---|---|---|---|---|---|---|---|
| VALUE YEAR | | 2017 | 2016 | 2014 | 2011 | | | | |
| REASON FOR CHANGE | | RAPP | MISC | RAPP | RAPP | | | | |
| APPRAISED VALUE | LAND | 9,400 | 9,400 | 9,400 | 9,400 | | | | |
| | IMPR | 132,300 | 118,200 | 118,300 | 118,300 | | | | |
| | TOTAL | 141,700 | 127,600 | 127,700 | 127,700 | | | | |
| ASSESSED VALUE | LAND | 3,290 | 3,290 | 3,290 | 3,290 | | | | |
| | IMPR | 46,310 | 41,370 | 41,410 | 41,410 | | | | |
| | TOTAL | 49,600 | 44,660 | 44,700 | 44,700 | | | | |

| OCCUPANCY | EXTERIOR |
|---|---|
| ■ SNGL FMLY | ☐ WOOD |
| ☐ DUPLEX | ☐ STUCCO |
| ☐ TRIPLEX | ☐ ALM/VYNL |
| ☐ CONVR | ☐ CONC BLK |
| ☐ MOBILE HM | ☐ METAL |
| ☐ BI/L TRI/L | ■ BRICK |
| ☐ MOD/MAN | ☐ STONE |

| ROOFING | ROOF TYPE |
|---|---|
| ☐ METAL | ■ GABLE |
| ☐ SLT/TLE | ☐ HIP |
| ■ SHINGLES | ☐ GAMBREL |
| ☐ SHAKES | ☐ MANSARD |
| ☐ COMPOSITE | ☐ FLAT |

| FLOORS | B | 1 | 2 | 3 | U |
|---|---|---|---|---|---|
| CONCRETE | ■ | ☐ | ☐ | ☐ | ☐ |
| WOOD | ☐ | ☐ | ■ | ☐ | ☐ |
| TILE/COMPO | ☐ | ☐ | ☐ | ☐ | ☐ |
| CARPET | ☐ | ■ | ☐ | ☐ | ☐ |

| INT. FINISH | B | 1 | 2 | 3 | U |
|---|---|---|---|---|---|
| PLASTER/DW | ☐ | ■ | ■ | ☐ | ☐ |
| PANELING | ☐ | ☐ | ☐ | ☐ | ☐ |
| UNFINISHED | ■ | ☐ | ☐ | ☐ | ☐ |

| ACCOMMODATIONS | | | | | |
|---|---|---|---|---|---|
| # OF ROOMS | | 4 | | | |
| BEDROOMS | | 1 | 2 | | |
| FIREPLACES | | 1 | | | |

| HEAT & AC | B | 1 | 2 | 3 | U |
|---|---|---|---|---|---|
| NO HEAT | ☐ | ☐ | ☐ | ☐ | ☐ |
| CTRL HEAT | ☐ | ■ | ■ | ☐ | ☐ |
| HW/STEAM | ☐ | ☐ | ☐ | ☐ | ☐ |
| ELECTRIC | ☐ | ☐ | ☐ | ☐ | ☐ |
| HEAT PUMP | ☐ | ☐ | ☐ | ☐ | ☐ |
| FLR/WALL | ☐ | ☐ | ☐ | ☐ | ☐ |
| STVE/SPCE | ☐ | ☐ | ☐ | ☐ | ☐ |
| GEOTHERMAL | ☐ | ☐ | ☐ | ☐ | ☐ |
| OUTSIDE | ☐ | ☐ | ☐ | ☐ | ☐ |
| CTRL A/C | ☐ | ■ | ■ | ☐ | ☐ |

| PLUMBING | | | | | BASE ■ |
|---|---|---|---|---|---|
| X FULL BATH | | | | | |
| X HALF BATH | | 1 | | | |
| X FIXTURES | | | 1 | | |

| FLOOR | AREA | CONST | VALUE |
|---|---|---|---|
| 1 | 1296 | BRK | 116,510 |
| .25 | 314 | BRK | 21,450 |
| | | | |
| | | | |
| | | | |
| | | | |
| | | | |
| | | | |
| | | | |
| BSMT | 962 | | 12,510 |

| | | | |
|---|---|---|---|
| SUBTOTAL | | | 150,470 |
| MULTI-FAMILY # | 0 | | 0 |
| BSMT FINISH | 0 | S.F. | 0 |
| FIREPLACE # | 1 | | 4,000 |
| HEATING | 0 | S.F. | 0 |
| AIR COND | 1,610 | S.F. | 2,410 |
| PLUMBING # | 3 | | 3,300 |
| GARAGES & CARPORTS | | | 5,200 |
| EXTRA FEATURES | | | 1,400 |
| SUBTOTAL | | | 166,780 |
| GRADE FACTOR | | | 115 % |
| UNADJUSTED VALUE | | | 191,800 |
| FACTOR | | | 100 % |

SKETCH

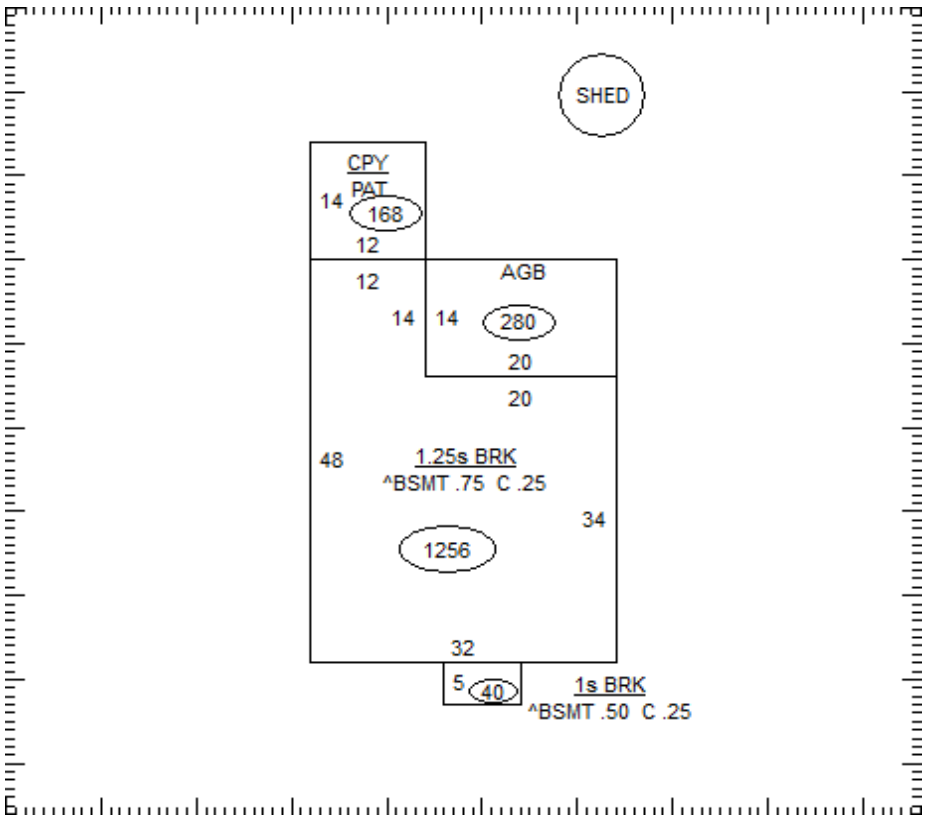


| OCCUPANCY | ST.HT | SIZE | AREA | GRADE | PRICE | AGE | REMD | CND | UNADJ VAL | PHYS | PHYS VAL | FUNC | TRUE VAL |
|---|---|---|---|---|---|---|---|---|---|---|---|---|---|
| DWELLING | 1.25 | SK | 1,610 | B- | | 1938 | | A | 191,800 | 40 | 115,080 | | 132,300 |
| 1 Shed | | 6x6 | 36 | C | | 2000 | | A | | 29 | | | 0 |
| 2 | | | | | | | | | | | | | |
| 3 | | | | | | | | | | | | | |
| 4 | | | | | | | | | | | | | |
| 5 | | | | | | | | | | | | | |
| 6 | | | | | | | | | | | | | |
| 7 | | | | | | | | | | | | | |
| 8 | | | | | | | | | | | | | |
| 9 | | | | | | | | | | | | | |
| 10 | | | | | | | | | | | | | |
| 11 | | | | | | | | | | | | | |
| | | | | | | | | | | | TOTAL | | 132,300 |

05-066000.0000

COMMENTS

Dwelling has an Economic Factor of 115%