05-059500.0000

BUTLER TWP-COLDWATER CORP / COLDWATER SD
08-27-381-022

PROP. CLASS		
5	1	0

NEIGHBORHOOD	
000502-TM50	
M	14A6
B	
C	74

MENCHHOFER WILLIAM K & CANDI
MENCHHOFER WILLIAM K & CANDI
602 E MAIN ST
COLDWATER, OH 45828

LEGAL INFORMATION
FETZERS ADD

LOT#: 217

	OWNERSHIP	ADDRESS	CITY	STATE	ZIP	DATE	AMOUNT	DEED:CONV#	JS	VALID
1	MENCHHOFER WILLIAM K &	602 E MAIN ST	COLDWATER	OH	45828	04/17/2018	159,500	2:SUC : 237	☐	■
2	J HENRY WACKER FARM LLC	511 N EASTERN AVE	SAINT HENRY	OH	45883	04/13/2017	78,300	2:WDC : 229	☐	☐
3	JPMORGAN CHASE BANK NA	3415 VISION DR	COLUMBUS	OH	43219	03/09/2017	66,000	2:SHC : 150	☐	☐

X: ☐ TTO LISTER: DA DATE: 03/11/2005 TIME: 12:00:00 AM ☐ LETTER ■ LETTER REC'D GIS CODE

STREET/ROAD	TOPOGRAPHY	PU-UTILITIES-PR		NEIGHBORHOOD	INFLUENCE FACTORS	
■ PAVED	■ LEVEL	☐ WATER	☐	☐ IMPROVING	☐ A. NO ROAD	☐ F. RESTRICT
☐ GRAVEL	☐ HIGH	☐ SEWER	☐	■ STATIC	☐ B. TOPGRHY	☐ G. WOOD LT
☐ DIRT	☐ LOW	☐ GAS	☐	☐ DECLINING	☐ C. Ex Front	☐ H. VACANCY
☐ SIDEWALKS	☐ ROLLING	☐ ELECTRIC	☐	☐ OLD	☐ D. QUANTITY	☐ I. WATER FRONT
☐ CURBS	☐ STANDARD	■ STANDARD		☐ STANDARD	☐ E. SZ/SHAPE	☐ J. OTHER/CDU

PROPERTY LOCATION
602 E MAIN ST, COLDWATER

COMMENT
TY2018:Net Gen=$1,236.10, Other Assessment=$0.00

LAND COMPUTATIONS

LAND TYPE	SIZE	M RATE C	INF	M VALUE C
F:Front	F43 D132	ST200 DP94 ADJ188		8,100 0
			TOTAL	8,100 0

VALUATION SUMMARY

VALUE YEAR		2017	2014	2011					
REASON FOR CHANGE		RAPP	RAPP	RAPP					
APPRAISED VALUE	LAND	8,100	7,900	8,100					
	IMPR	90,000	75,600	77,900					
	TOTAL	98,100	83,500	86,000					
ASSESSED VALUE	LAND	2,840	2,770	2,840					
	IMPR	31,500	26,460	27,270					
	TOTAL	34,340	29,230	30,110					

OCCUPANCY	EXTERIOR
■ SNGL FMLY	☐ WOOD
☐ DUPLEX	☐ STUCCO
☐ TRIPLEX	■ ALM/VYNL
☐ CONVR	☐ CONC BLK
☐ MOBILE HM	☐ METAL
☐ BI/L TRI/L	☐ BRICK
☐ MOD/MAN	☐ STONE

ROOFING	ROOF TYPE
☐ METAL	■ GABLE
☐ SLT/TLE	☐ HIP
■ SHINGLES	☐ GAMBREL
☐ SHAKES	☐ MANSARD
☐ COMPOSITE	☐ FLAT

FLOORS	B	1	2	3	U
CONCRETE	■	☐	☐	☐	☐
WOOD	☐	■	■	☐	☐
TILE/COMPO	☐	☐	☐	☐	☐
CARPET	☐	☐	☐	☐	☐

INT. FINISH	B	1	2	3	U
PLASTER/DW	☐	■	■	☐	☐
PANELING	☐	☐	☐	☐	☐
UNFINISHED	■	☐	☐	☐	☐

ACCOMMODATIONS					
# OF ROOMS		3	3		
BEDROOMS			3		
FIREPLACES		1			

HEAT & AC	B	1	2	3	U
NO HEAT	☐	☐	☐	☐	☐
CTRL HEAT	☐	■	■	☐	☐
HW/STEAM	☐	☐	☐	☐	☐
ELECTRIC	☐	☐	☐	☐	☐
HEAT PUMP	☐	☐	☐	☐	☐
FLR/WALL	☐	☐	☐	☐	☐
STVE/SPCE	☐	☐	☐	☐	☐
GEOTHERMAL	☐	☐	☐	☐	☐
OUTSIDE	☐	☐	☐	☐	☐
CTRL A/C	☐	☐	☐	☐	☐

PLUMBING					BASE ■
X FULL BATH		1			
X HALF BATH					
X FIXTURES					

FLOOR	AREA	CONST	VALUE
1	1170	FR	102,300
2ND	692	FR	29,040
BSMT	692		9,000
SUBTOTAL			140,340
MULTI-FAMILY #	0		0
BSMT FINISH	0 S.F.		0
FIREPLACE #	1		4,000
HEATING	0 S.F.		0
AIR COND	0 S.F.		0
PLUMBING #	3		3,300
GARAGES & CARPORTS			0
EXTRA FEATURES			6,300
SUBTOTAL			153,940
GRADE FACTOR			105 %
UNADJUSTED VALUE			161,640
FACTOR			100 %

SKETCH

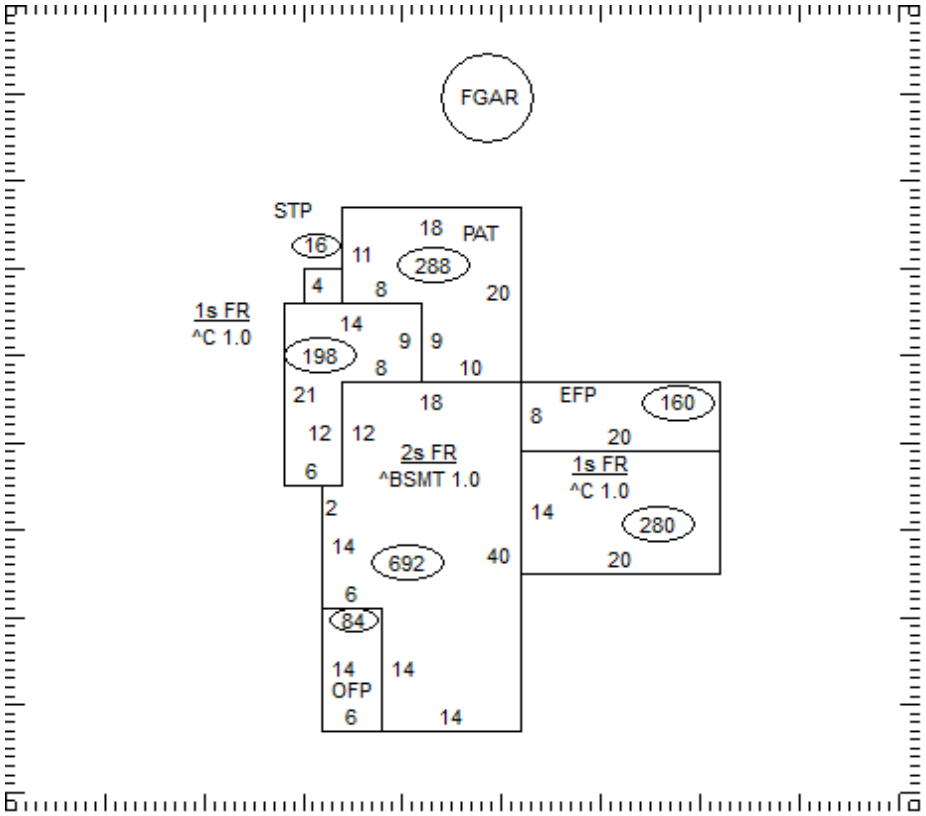

OCCUPANCY	ST.HT	SIZE	AREA	GRADE	PRICE	AGE	REMD	CND	UNADJ VAL	PHYS	PHYS VAL	FUNC	TRUE VAL
DWELLING	2	SK	1,862	C+		1942		A	161,640	45	88,900		88,900
1 Gar - Frame		24x28	672	C	15.80	1950	89	A	10,620	90	1,060		1,100
2													
3													
4													
5													
6													
7													
8													
9													
10													
11													
											TOTAL		90,000

05-059500.0000

COMMENTS

Dwelling has an Economic Factor of 100%

05-059500.0000

BUTLER TWP-COLDWATER CORP / COLDWATER SD
08-27-381-022

PROP. CLASS		
5	1	0

NEIGHBORHOOD	
000502-TM50	
M	14A6
B	
C	74

MENCHHOFER WILLIAM K & CANDI
MENCHHOFER WILLIAM K & CANDI
602 E MAIN ST
COLDWATER, OH 45828

LEGAL INFORMATION
FETZERS ADD

LOT#: 217

	OWNERSHIP	ADDRESS	CITY	STATE	ZIP	DATE	AMOUNT	DEED:CONV#	JS	VALID
1	DIRCKSEN ERIN M	602 E MAIN ST	COLDWATER	OH	45828	10/20/2009	85,000	WDC : A-M : 620	☐	■
2	GROSS TONY L & SHARON M	602 E MAIN ST	COLDWATER	OH	45828	12/31/2001	87,000	: A : 0	☐	■
3							0	0	☐	☐

X: ☐ TTO LISTER: DA DATE: 03/11/2005 TIME: 12:00:00 AM ☐ LETTER ■ LETTER REC'D GIS CODE

STREET/ROAD	TOPOGRAPHY	PU-UTILITIES-PR	NEIGHBORHOOD	INFLUENCE FACTORS	
■ PAVED	■ LEVEL	☐ WATER ☐	☐ IMPROVING	☐ A. NO ROAD	☐ F. RESTRICT
☐ GRAVEL	☐ HIGH	☐ SEWER ☐	■ STATIC	☐ B. TOPGRHY	☐ G. WOOD LT
☐ DIRT	☐ LOW	☐ GAS ☐	☐ DECLINING	☐ C. Ex Front	☐ H. VACANCY
☐ SIDEWALKS	☐ ROLLING	☐ ELECTRIC ☐	☐ OLD	☐ D. QUANTITY	☐ I. WATER FRONT
☐ CURBS	☐ STANDARD	■ STANDARD	☐ STANDARD	☐ E. SZ/SHAPE	☐ J. OTHER/CDU

PROPERTY LOCATION
602 E MAIN ST, COLDWATER

COMMENT

LAND COMPUTATIONS

LAND TYPE	SIZE	M RATE C	INF	M VALUE C
			TOTAL	8,100 0

VALUATION SUMMARY

VALUE YEAR									
REASON FOR CHANGE									
APPRAISED VALUE	LAND								
	IMPR								
	TOTAL								
ASSESSED VALUE	LAND								
	IMPR								
	TOTAL								

OCCUPANCY	EXTERIOR
☐ SNGL FMLY	☐ WOOD
☐ DUPLEX	☐ STUCCO
☐ TRIPLEX	☐ ALM/VYNL
☐ CONVR	☐ CONC BLK
☐ MOBILE HM	☐ METAL
☐ BI/L TRI/L	☐ BRICK
☐ MOD/MAN	☐ STONE

ROOFING	ROOF TYPE
☐ METAL	☐ GABLE
☐ SLT/TLE	☐ HIP
☐ SHINGLES	☐ GAMBREL
☐ SHAKES	☐ MANSARD
☐ COMPOSITE	☐ FLAT

FLOORS	B	1	2	3	U
CONCRETE	☐	☐	☐	☐	☐
WOOD	☐	☐	☐	☐	☐
TILE/COMPO	☐	☐	☐	☐	☐
CARPET	☐	☐	☐	☐	☐

INT. FINISH	B	1	2	3	U
PLASTER/DW	☐	☐	☐	☐	☐
PANELING	☐	☐	☐	☐	☐
UNFINISHED	☐	☐	☐	☐	☐

ACCOMMODATIONS					
# OF ROOMS					
BEDROOMS					
FIREPLACES					

HEAT & AC	B	1	2	3	U
NO HEAT	☐	☐	☐	☐	☐
CTRL HEAT	☐	☐	☐	☐	☐
HW/STEAM	☐	☐	☐	☐	☐
ELECTRIC	☐	☐	☐	☐	☐
HEAT PUMP	☐	☐	☐	☐	☐
FLR/WALL	☐	☐	☐	☐	☐
STVE/SPCE	☐	☐	☐	☐	☐
GEOTHERMAL	☐	☐	☐	☐	☐
OUTSIDE	☐	☐	☐	☐	☐
CTRL A/C	☐	☐	☐	☐	☐

PLUMBING					BASE ☐
X FULL BATH					
X HALF BATH					
X FIXTURES					

FLOOR	AREA	CONST	VALUE
SUBTOTAL			0
MULTI-FAMILY #	0		0
BSMT FINISH	0	S.F.	0
FIREPLACE #	0		0
HEATING	0	S.F.	0
AIR COND	0	S.F.	0
PLUMBING #	0		0
GARAGES & CARPORTS			0
EXTRA FEATURES			0
SUBTOTAL			0
GRADE FACTOR			%
UNADJUSTED VALUE			0
FACTOR			%

SKETCH

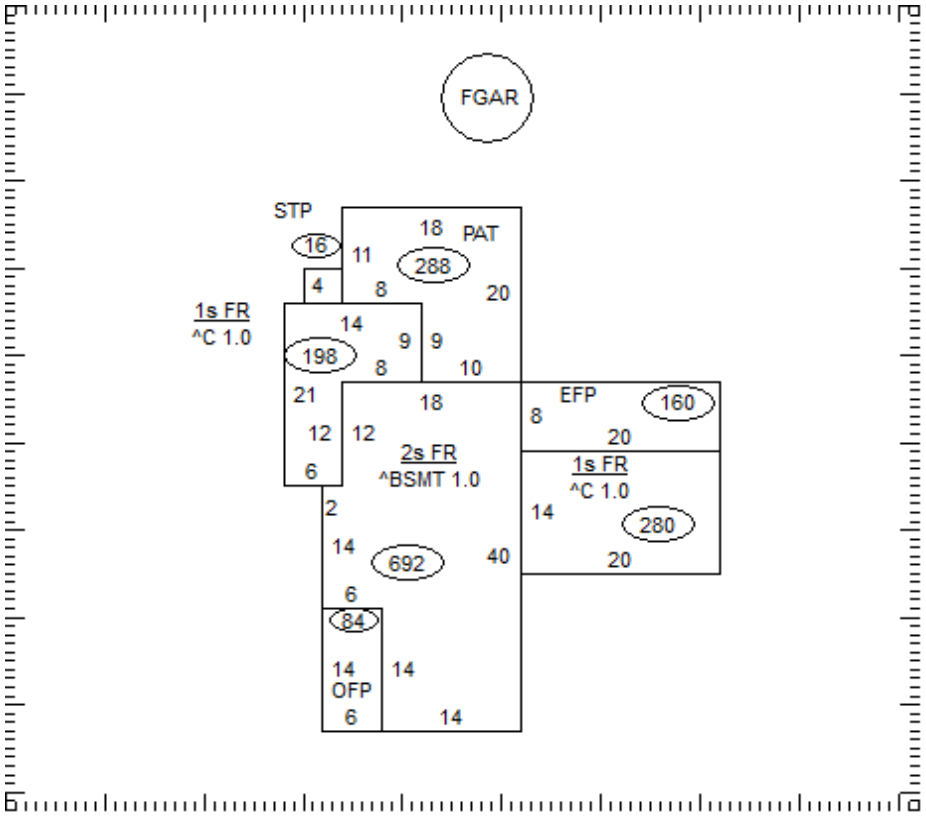

OCCUPANCY	ST.HT	SIZE	AREA	GRADE	PRICE	AGE	REMD	CND	UNADJ VAL	PHYS	PHYS VAL	FUNC	TRUE VAL
DWELLING		SK											
1													
2													
3													
4													
5													
6													
7													
8													
9													
10													
11													
												TOTAL	0

05-059500.0000

COMMENTS