03-010900.0200

BUTLER TWP / COLDWATER SD

08-20-300-018

PROP. CLASS		
5	1	0

NEIGHBORHOOD	
009035-R150	
M	08
B	
C	13

FRONING BRUCE A & BEVERLY J

FRONING BRUCE A & BEVERLY J
5192 GAUSE RD
COLDWATER, OH 45828

LEGAL INFORMATION

PT NW SW

RTS: 002-06-20
Acres:4.9999

	OWNERSHIP	ADDRESS	CITY	STATE	ZIP	DATE	AMOUNT	DEED:CONV#	JS	VALID
1	FRONING BRUCE A &	5192 GAUSE RD	COLDWATER	OH	45828	04/15/2016	290,000	SUC : 245	☐	■
2	NOW JASON Q	5192 GAUSE RD	COLDWATER	OH	45828	11/10/2015	0	QCE : X : 0	☐	☐
3	NOW JASON & GINA	5192 GAUSE RD	COLDWATER	OH	45828	09/25/2003	0	: X : 0	☐	☐

X: ☐ TTO LISTER: JK DATE: 02/21/2017 TIME: 12:00:00 AM ☐ LETTER ☐ LETTER REC'D GIS CODE Minor Sub

STREET/ROAD	TOPOGRAPHY	PU-UTILITIES-PR		NEIGHBORHOOD	INFLUENCE FACTORS	
■ PAVED	■ LEVEL	☐ WATER	☐	☐ IMPROVING	☐ A. NO ROAD	☐ F. RESTRICT
☐ GRAVEL	☐ HIGH	☐ SEWER	☐	■ STATIC	☐ B. TOPGRHY	☐ G. WOOD LT
☐ DIRT	☐ LOW	☐ GAS	☐	☐ DECLINING	☐ C. Ex Front	☐ H. VACANCY
☐ SIDEWALKS	☐ ROLLING	☐ ELECTRIC	☐	☐ OLD	☐ D. QUANTITY	☐ I. WATER FRONT
☐ CURBS	☐ STANDARD	■ STANDARD		☐ STANDARD	☐ E. SZ/SHAPE	☐ J. OTHER/CDU

PROPERTY LOCATION

5192 GAUSE RD,

COMMENT

TY2018:Net Gen=$4,004.38, Other Assessment=$3.32
DE17 NOH/GAR NOW SLAB- USED FOR DRIVEWAY
DE17 DESKTOP RWV CHG: COR BAL TO OFP/OFP, OFP TO OMP, ADJ PAT
DE16NOH/RMV COOP, GAR SLAB ONLY
DE15 ADD GAR/ONLY 10% COMPL
DE14 NOH- NO CHG-24 X 24 DET GARAGE (Foundation there 7/2013)
DE13 MAJOR REMODEL EST START DATE 2011/COMPL 2012. As of 07/15/2013, still minor updates to be completed. Interior info confirmed. May require interior inspection.

LAND COMPUTATIONS

LAND TYPE	SIZE	M RATE C	INF	M VALUE C
HS:Home Site	AC:1	16500		16,500 0
SM:Small Acreage	AC:3.9999	6400		25,600 0
Total Acres: 4.9999			TOTAL	42,100 0

VALUATION SUMMARY

VALUE YEAR		2017	2017	2016	2014	2013	2013	2011	
REASON FOR CHANGE		RAPP	MISC	REMB	RAPP	NC	MISC	RAPP	
APPRAISED VALUE	LAND	42,100	46,700	46,700	46,700	40,600	40,600	40,600	
	IMPR	275,000	249,200	244,200	244,400	212,500	64,200	64,200	
	TOTAL	317,100	295,900	290,900	291,100	253,100	104,800	104,800	
ASSESSED VALUE	LAND	14,740	16,350	16,350	16,350	14,210	14,210	14,210	
	IMPR	96,250	87,220	85,470	85,540	74,380	22,470	22,470	
	TOTAL	110,990	103,570	101,820	101,890	88,590	36,680	36,680	

OCCUPANCY	EXTERIOR
■ SNGL FMLY	☐ WOOD
☐ DUPLEX	☐ STUCCO
☐ TRIPLEX	■ ALM/VYNL
☐ CONVR	☐ CONC BLK
☐ MOBILE HM	☐ METAL
☐ BI/L TRI/L	■ BRICK
☐ MOD/MAN	■ STONE

ROOFING	ROOF TYPE
☐ METAL	■ GABLE
☐ SLT/TLE	☐ HIP
■ SHINGLES	☐ GAMBREL
☐ SHAKES	☐ MANSARD
☐ COMPOSITE	☐ FLAT

FLOORS	B	1	2	3	U
CONCRETE	■	☐	☐	☐	☐
WOOD	☐	☐	☐	☐	☐
TILE/COMPO	■	■	■	☐	■
CARPET	■	■	■	☐	■

INT. FINISH	B	1	2	3	U
PLASTER/DW	■	■	■	☐	■
PANELING	☐	☐	☐	☐	☐
UNFINISHED	■	☐	☐	☐	☐

ACCOMMODATIONS					
# OF ROOMS	3		4		3
BEDROOMS			1		3
FIREPLACES		1			

HEAT & AC	B	1	2	3	U
NO HEAT	☐	☐	☐	☐	☐
CTRL HEAT	☐	☐	☐	☐	☐
HW/STEAM	☐	☐	☐	☐	☐
ELECTRIC	☐	☐	☐	☐	☐
HEAT PUMP	☐	☐	☐	☐	☐
FLR/WALL	☐	☐	☐	☐	☐
STVE/SPCE	☐	☐	☐	☐	☐
GEOTHERMAL	■	■	■	■	■
OUTSIDE	☐	☐	☐	☐	☐
CTRL A/C	■	■	■	■	■

PLUMBING				BASE ■	
X FULL BATH	1			1	
X HALF BATH		1			
X FIXTURES	1			1	

FLOOR	AREA	CONST	VALUE
1	564	BRK	48,960
1	768	FR	62,310
2ND	264	BRK	11,000
2ND	1686	FR	65,650
BSMT	768		9,980

SUBTOTAL			197,900
MULTI-FAMILY #	0		0
BSMT FINISH	768	S.F.	9,980
FIREPLACE #	1		4,000
HEATING	0	S.F.	0
AIR COND	4,050	S.F.	6,080
PLUMBING #	10		11,000
GARAGES & CARPORTS			15,100
EXTRA FEATURES			21,500
SUBTOTAL			265,560
GRADE FACTOR			120 %
UNADJUSTED VALUE			318,670
FACTOR			100 %

SKETCH

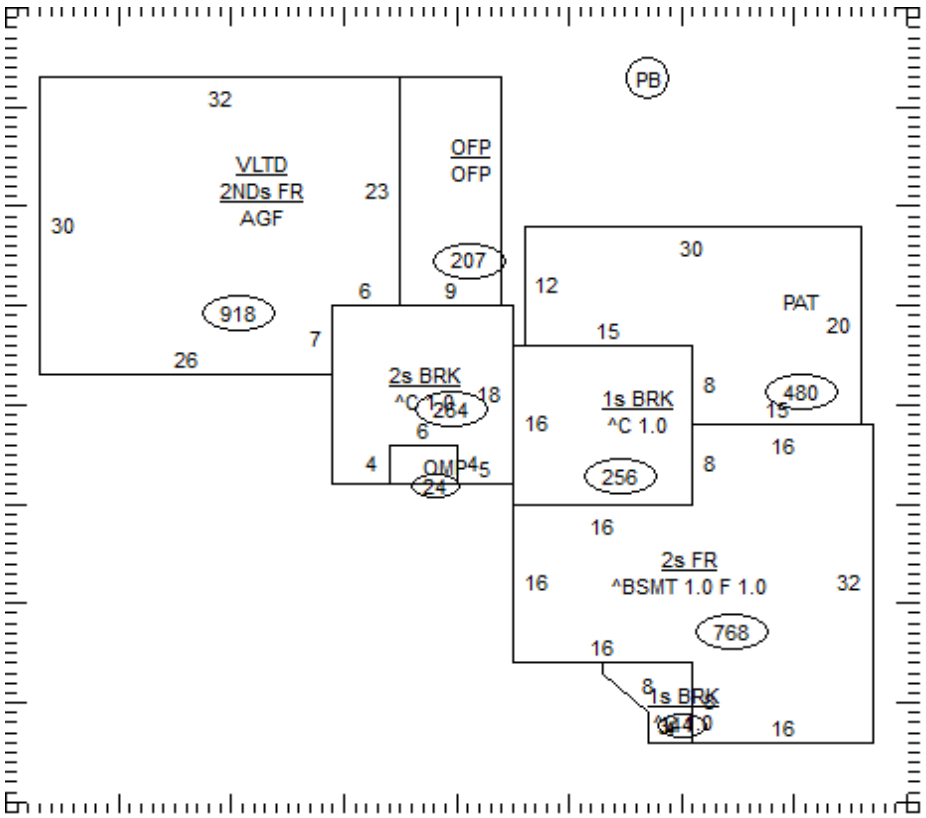

OCCUPANCY	ST.HT	SIZE	AREA	GRADE	PRICE	AGE	REMD	CND	UNADJ VAL	PHYS	PHYS VAL	FUNC	TRUE VAL
DWELLING	2	SK	3,282	B		1930	2012	G	318,670	25	239,000	UF7	273,400
1 Pole Bldg	12	20x40	800	C	10.00	1970		A	8,000	80	1,600		1,600
2													
3													
4													
5													
6													
7													
8													
9													
10													
11													
											TOTAL		275,000

03-010900.0200

COMMENTS

ex fixtures- kitchen in basement, double sinks
Dwelling has an Economic Factor of 123%