05-077500.0000

WENNING GABRIEL L

WENNING GABRIEL L
624 W WALNUT ST
COLDWATER, OH 45828

BUTLER TWP-COLDWATER CORP / COLDWATER SD
08-33-205-011

LEGAL INFORMATION
BIRKMEYER HGHTS

LOT#: 395

PROP. CLASS		
5	1	0

NEIGHBORHOOD	
000505-TM50	
M	14C3
B	
C	22

	OWNERSHIP	ADDRESS	CITY	STATE	ZIP	DATE	AMOUNT	DEED:CONV#	JS	VALID
1	WENNING GABRIEL L	624 W WALNUT ST	COLDWATER	OH	45828	04/27/2018	125,000	WDC : 262	☐	■
2	MC COWAN PATRICIA L	624 W WALNUT ST	COLDWATER	OH	45828	07/22/2014	0	QCE : X : 0	☐	☐
3	MCCOUWAN ARTHUR G &	624 WALNUT ST	COLDWATER	OH	45828	08/04/2004	74,500	WDC : A : 0	☐	■

X: ☐ TTO LISTER: NS DATE: 01/27/2005 TIME: 12:00:00 AM ☐ LETTER ■ LETTER REC'D GIS CODE

STREET/ROAD	TOPOGRAPHY	PU-UTILITIES-PR	NEIGHBORHOOD	INFLUENCE FACTORS
■ PAVED	■ LEVEL	☐ WATER ☐	☐ IMPROVING	☐ A. NO ROAD ☐ F. RESTRICT
☐ GRAVEL	☐ HIGH	☐ SEWER ☐	■ STATIC	☐ B. TOPGRHY ☐ G. WOOD LT
☐ DIRT	☐ LOW	☐ GAS ☐	☐ DECLINING	☐ C. Ex Front ☐ H. VACANCY
■ SIDEWALKS	☐ ROLLING	☐ ELECTRIC ☐	☐ OLD	☐ D. QUANTITY ☐ I. WATER FRONT
☐ CURBS	☐ STANDARD	■ STANDARD	☐ STANDARD	☐ E. SZ/SHAPE ☐ J. OTHER/CDU

PROPERTY LOCATION
624 W WALNUT ST, COLDWATER

COMMENT
TY2017:Net Gen=$1,346.70, Other Assessment=$104.66
DE15 ADD FN BSMNT PER DATA MAILER
DE16 DESKTOP RVW CHG: cor msmnts

LAND COMPUTATIONS

LAND TYPE	SIZE	M RATE C	INF	M VALUE C
F:Front	F58 D132	ST200 DP94 ADJ188		10,900 0
			TOTAL	10,900 0

VALUATION SUMMARY

VALUE YEAR		2017	2016	2015	2014	2011			
REASON FOR CHANGE		RAPP	MISC	NC	RAPP	RAPP			
APPRAISED VALUE	LAND	10,900	11,500	11,500	11,500	10,900			
	IMPR	95,700	90,900	81,100	76,300	72,600			
	TOTAL	106,600	102,400	92,600	87,800	83,500			
ASSESSED VALUE	LAND	3,820	4,030	4,030	4,030	3,820			
	IMPR	33,500	31,820	28,390	26,710	25,410			
	TOTAL	37,320	35,850	32,420	30,740	29,230			

OCCUPANCY	EXTERIOR
■ SNGL FMLY	☐ WOOD
☐ DUPLEX	☐ STUCCO
☐ TRIPLEX	■ ALM/VYNL
☐ CONVR	☐ CONC BLK
☐ MOBILE HM	☐ METAL
☐ BI/L TRI/L	☐ BRICK
☐ MOD/MAN	☐ STONE

ROOFING	ROOF TYPE
☐ METAL	■ GABLE
☐ SLT/TLE	☐ HIP
■ SHINGLES	☐ GAMBREL
☐ SHAKES	☐ MANSARD
☐ COMPOSITE	☐ FLAT

FLOORS	B	1	2	3	U
CONCRETE	■	☐	☐	☐	☐
WOOD	☐	☐	☐	☐	☐
TILE/COMPO	☐	■	☐	☐	☐
CARPET	■	■	☐	☐	☐

INT. FINISH	B	1	2	3	U
PLASTER/DW	■	■	☐	☐	☐
PANELING	☐	■	☐	☐	☐
UNFINISHED	■	☐	☐	☐	☐

ACCOMMODATIONS					
# OF ROOMS	1	6			
BEDROOMS		3			
FIREPLACES					

HEAT & AC	B	1	2	3	U
NO HEAT	☐	☐	☐	☐	☐
CTRL HEAT	■	■	☐	☐	☐
HW/STEAM	☐	■	☐	☐	☐
ELECTRIC	☐	☐	☐	☐	☐
HEAT PUMP	☐	☐	☐	☐	☐
FLR/WALL	☐	☐	☐	☐	☐
STVE/SPCE	☐	☐	☐	☐	☐
GEOTHERMAL	☐	☐	☐	☐	☐
OUTSIDE	☐	☐	☐	☐	☐
CTRL A/C	■	■	☐	☐	☐

PLUMBING	BASE ■				
X FULL BATH		1			
X HALF BATH					
X FIXTURES					

FLOOR	AREA	CONST	VALUE
1	1648	FR	123,120
BSMT	840		10,920
SUBTOTAL			134,040
MULTI-FAMILY #	0		0
BSMT FINISH	630	S.F.	8,190
FIREPLACE #	0		0
HEATING	0	S.F.	0
AIR COND	2,278	S.F.	3,420
PLUMBING #	3		3,300
GARAGES & CARPORTS			0
EXTRA FEATURES			1,600
SUBTOTAL			150,550
GRADE FACTOR			100 %
UNADJUSTED VALUE			150,550
FACTOR			100 %

SKETCH

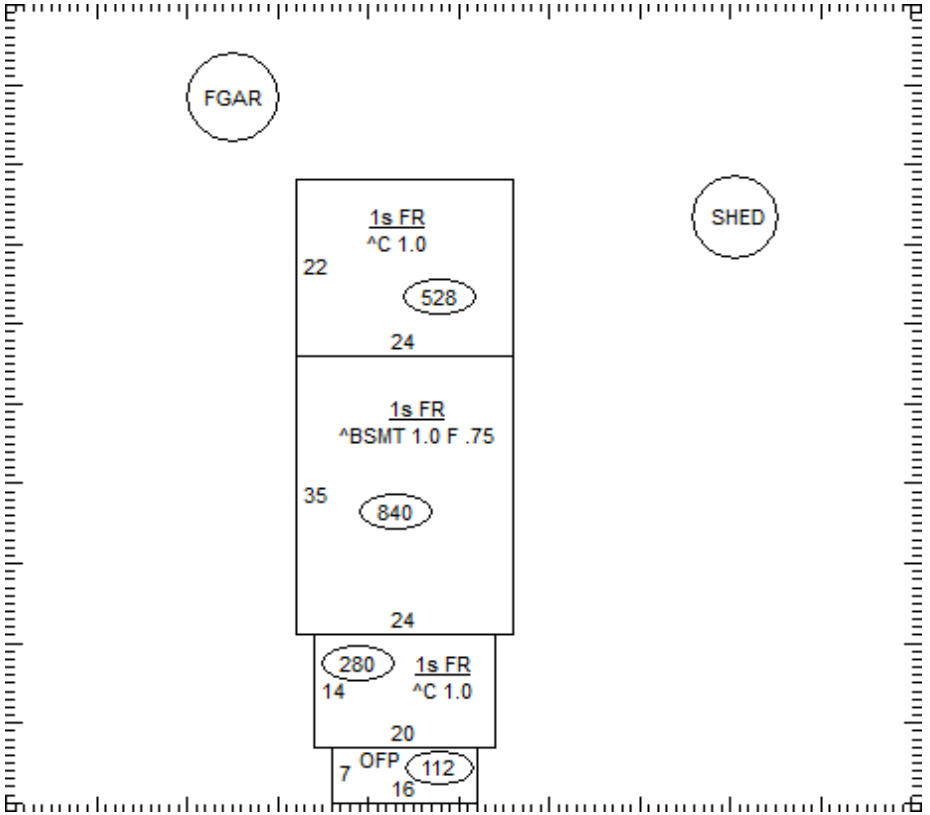

OCCUPANCY	ST.HT	SIZE	AREA	GRADE	PRICE	AGE	REMD	CND	UNADJ VAL	PHYS	PHYS VAL	FUNC	TRUE VAL
DWELLING	1	SK	1,648	C		1937	1974	A	150,550	42	87,320		94,300
1 Shed		20x24	480	C	7.00	1980		A	3,360	67	1,110		1,100
2 Gar - Frame		12x40	480	D	12.64	1937	49	A	6,070	95	300		300
3													
4													
5													
6													
7													
8													
9													
10													
11													

05-077500.0000

TOTAL 95,700

COMMENTS

Dwelling has an Economic Factor of 108%

05-077500.0000

WENNING GABRIEL L

WENNING GABRIEL L
624 W WALNUT ST
COLDWATER, OH 45828

BUTLER TWP-COLDWATER CORP / COLDWATER SD
08-33-205-011

LEGAL INFORMATION
BIRKMEYER HGHTS

LOT#: 395

PROP. CLASS		
5	1	0

NEIGHBORHOOD	
000505-TM50	
M	14C3
B	
C	22

	OWNERSHIP	ADDRESS	CITY	STATE	ZIP	DATE	AMOUNT	DEED:CONV#	JS	VALID
1	SEVERT EDWARD R & ANNA M	624 W WALNUT ST	COLDWATER	OH	45828		0	: 0	☐	☐
2							0	0	☐	☐
3							0	0	☐	☐

X: ☐ TTO LISTER: NS DATE: 01/27/2005 TIME: 12:00:00 AM ☐ LETTER ■ LETTER REC'D GIS CODE

STREET/ROAD	TOPOGRAPHY	PU-UTILITIES-PR	NEIGHBORHOOD	INFLUENCE FACTORS
■ PAVED	■ LEVEL	☐ WATER ☐	☐ IMPROVING	☐ A. NO ROAD ☐ F. RESTRICT
☐ GRAVEL	☐ HIGH	☐ SEWER ☐	■ STATIC	☐ B. TOPGRHY ☐ G. WOOD LT
☐ DIRT	☐ LOW	☐ GAS ☐	☐ DECLINING	☐ C. Ex Front ☐ H. VACANCY
■ SIDEWALKS	☐ ROLLING	☐ ELECTRIC ☐	☐ OLD	☐ D. QUANTITY ☐ I. WATER FRONT
☐ CURBS	☐ STANDARD	■ STANDARD	☐ STANDARD	☐ E. SZ/SHAPE ☐ J. OTHER/CDU

PROPERTY LOCATION
624 W WALNUT ST, COLDWATER

COMMENT

LAND COMPUTATIONS

LAND TYPE	SIZE	M RATE C	INF	M VALUE C
			TOTAL	10,900 0

VALUATION SUMMARY

VALUE YEAR									
REASON FOR CHANGE									
APPRAISED VALUE	LAND								
	IMPR								
	TOTAL								
ASSESSED VALUE	LAND								
	IMPR								
	TOTAL								

OCCUPANCY	EXTERIOR
☐ SNGL FMLY	☐ WOOD
☐ DUPLEX	☐ STUCCO
☐ TRIPLEX	☐ ALM/VYNL
☐ CONVR	☐ CONC BLK
☐ MOBILE HM	☐ METAL
☐ BI/L TRI/L	☐ BRICK
☐ MOD/MAN	☐ STONE

ROOFING	ROOF TYPE
☐ METAL	☐ GABLE
☐ SLT/TLE	☐ HIP
☐ SHINGLES	☐ GAMBREL
☐ SHAKES	☐ MANSARD
☐ COMPOSITE	☐ FLAT

FLOORS	B	1	2	3	U
CONCRETE	☐	☐	☐	☐	☐
WOOD	☐	☐	☐	☐	☐
TILE/COMPO	☐	☐	☐	☐	☐
CARPET	☐	☐	☐	☐	☐

INT. FINISH	B	1	2	3	U
PLASTER/DW	☐	☐	☐	☐	☐
PANELING	☐	☐	☐	☐	☐
UNFINISHED	☐	☐	☐	☐	☐

ACCOMMODATIONS					
# OF ROOMS					
BEDROOMS					
FIREPLACES					

HEAT & AC	B	1	2	3	U
NO HEAT	☐	☐	☐	☐	☐
CTRL HEAT	☐	☐	☐	☐	☐
HW/STEAM	☐	☐	☐	☐	☐
ELECTRIC	☐	☐	☐	☐	☐
HEAT PUMP	☐	☐	☐	☐	☐
FLR/WALL	☐	☐	☐	☐	☐
STVE/SPCE	☐	☐	☐	☐	☐
GEOTHERMAL	☐	☐	☐	☐	☐
OUTSIDE	☐	☐	☐	☐	☐
CTRL A/C	☐	☐	☐	☐	☐

PLUMBING					BASE ☐
X FULL BATH					
X HALF BATH					
X FIXTURES					

FLOOR	AREA	CONST	VALUE

SUBTOTAL		0
MULTI-FAMILY #	0	0
BSMT FINISH	0 S.F.	0
FIREPLACE #	0	0
HEATING	0 S.F.	0
AIR COND	0 S.F.	0
PLUMBING #	0	0
GARAGES & CARPORTS		0
EXTRA FEATURES		0
SUBTOTAL		0
GRADE FACTOR		%
UNADJUSTED VALUE		0
FACTOR		%

SKETCH

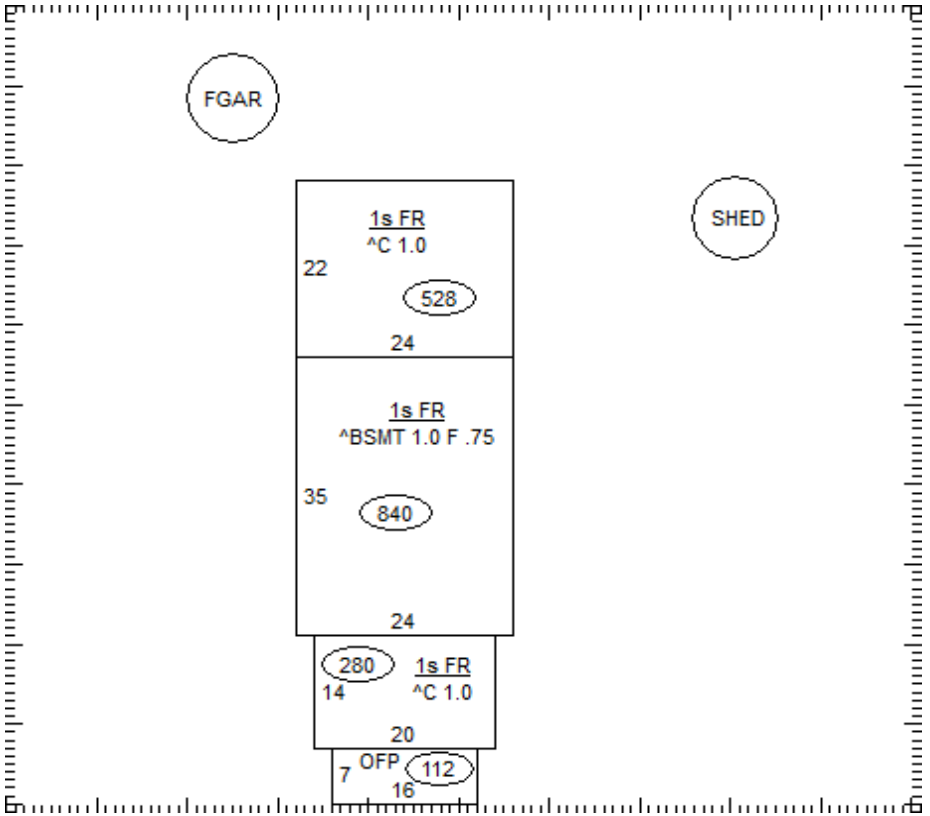

OCCUPANCY	ST.HT	SIZE	AREA	GRADE	PRICE	AGE	REMD	CND	UNADJ VAL	PHYS	PHYS VAL	FUNC	TRUE VAL
DWELLING		SK											
1													
2													
3													
4													
5													
6													
7													
8													
9													
10													
11													

05-077500.0000

TOTAL 0

COMMENTS