02-009400.0000

MILLER KYLE S
MILLER KYLE S
5312 US RTE 127
CELINA, OH 45822

BUTLER TWP / CELINA SD

08-24-277-007

LEGAL INFORMATION
OLIGER ALLOTMENT

LOT#: 7

PROP. CLASS		
5	1	0

NEIGHBORHOOD	
000205-RS50	
M	11
B	
C	31

	OWNERSHIP	ADDRESS	CITY	STATE	ZIP	DATE	AMOUNT	DEED:CONV#	JS	VALID
1	MILLER KYLE S	5312 US RTE 127	CELINA	OH	45822	11/21/2017	100,000	WDC : 800	☐	■
2	KREMER KYLE	5312 US ROUTE 127	CELINA	OH	45822	12/06/2013	73,000	WDC : 839	☐	■
3	BAKER RICK W	10849 DARBY BLVD	PLAIN CITY	OH	43064	11/19/2012	0	QCC : X : 0	☐	☐

X: ☐ TTO LISTER: DATE: 05/03/2013 TIME: 12:00:00 AM ☐ LETTER ☐ LETTER REC'D GIS CODE

STREET/ROAD	TOPOGRAPHY	PU-UTILITIES-PR	NEIGHBORHOOD	INFLUENCE FACTORS	
■ PAVED	■ LEVEL	☐ WATER ☐	☐ IMPROVING	☐ A. NO ROAD	☐ F. RESTRICT
☐ GRAVEL	☐ HIGH	☐ SEWER ☐	■ STATIC	☐ B. TOPGRHY	☐ G. WOOD LT
☐ DIRT	☐ LOW	☐ GAS ☐	☐ DECLINING	☐ C. Ex Front	☐ H. VACANCY
☐ SIDEWALKS	☐ ROLLING	☐ ELECTRIC ☐	☐ OLD	☐ D. QUANTITY	☐ I. WATER FRONT
☐ CURBS	☐ STANDARD	■ STANDARD	☐ STANDARD	☐ E. SZ/SHAPE	☐ J. OTHER/CDU

PROPERTY LOCATION
5312 US RT 127 , CELINA

COMMENT
TY2017:Net Gen=$1,413.80, Other Assessment=$0.00
DE13 RMV 2.5%RB- DIDN'T RETURN APP
DE12 TT PROBATE/ SHIRLEY DEC'D SEPT 13, 2011-RMV HS & 2.5% RB
DE11 ADD STP AND DK
DE15 PER DATA MAILER ADD DECK
DE17 DESKTOP RVW CHG: COR TO TRI LEVEL

LAND COMPUTATIONS

LAND TYPE	SIZE	M RATE C	INF	M VALUE C
HS:Home Site <1 @ 16500*0.65	AC:0.37	10730		10,700 0
Total Acres: .3700			TOTAL	10,700 0

VALUATION SUMMARY

VALUE YEAR		2017	2017	2015	2014	2011			
REASON FOR CHANGE		RAPP	MISC	NC	RAPP	RAPP			
APPRAISED VALUE	LAND	10,700	9,800	9,800	9,800	9,800			
	IMPR	81,100	61,600	66,100	65,300	65,300			
	TOTAL	91,800	71,400	75,900	75,100	75,100			
ASSESSED VALUE	LAND	3,750	3,430	3,430	3,430	3,430			
	IMPR	28,390	21,560	23,140	22,860	22,860			
	TOTAL	32,140	24,990	26,570	26,290	26,290			

OCCUPANCY	EXTERIOR
■ SNGL FMLY	☐ WOOD
☐ DUPLEX	☐ STUCCO
☐ TRIPLEX	■ ALM/VYNL
☐ CONVR	☐ CONC BLK
☐ MOBILE HM	☐ METAL
☐ BI/L TRI/L	■ BRICK
☐ MOD/MAN	☐ STONE

ROOFING	ROOF TYPE
☐ METAL	■ GABLE
☐ SLT/TLE	☐ HIP
■ SHINGLES	☐ GAMBREL
☐ SHAKES	☐ MANSARD
☐ COMPOSITE	☐ FLAT

FLOORS	B	1	2	3	U
CONCRETE	☐	☐	☐	☐	☐
WOOD	☐	☐	☐	☐	☐
TILE/COMPO	☐	■	☐	☐	☐
CARPET	☐	■	☐	☐	☐

INT. FINISH	B	1	2	3	U
PLASTER/DW	☐	■	☐	☐	☐
PANELING	☐	☐	☐	☐	☐
UNFINISHED	☐	☐	☐	☐	☐

ACCOMMODATIONS					
# OF ROOMS		5			
BEDROOMS		3			
FIREPLACES		1			

HEAT & AC	B	1	2	3	U
NO HEAT	☐	☐	☐	☐	☐
CTRL HEAT	☐	■	☐	☐	☐
HW/STEAM	☐	☐	☐	☐	☐
ELECTRIC	☐	☐	☐	☐	☐
HEAT PUMP	☐	☐	☐	☐	☐
FLR/WALL	☐	☐	☐	☐	☐
STVE/SPCE	☐	☐	☐	☐	☐
GEOTHERMAL	☐	☐	☐	☐	☐
OUTSIDE	☐	☐	☐	☐	☐
CTRL A/C	☐	■	☐	☐	☐

PLUMBING	BASE ■				
X FULL BATH					
X HALF BATH					
X FIXTURES					

FLOOR	AREA	CONST	VALUE
1	1248	FR	104,860
TRI	528	FR	16,860

SUBTOTAL			121,720
MULTI-FAMILY #	0		0
BSMT FINISH	0	S.F.	0
FIREPLACE #	1		4,000
HEATING	0	S.F.	0
AIR COND	1,248	S.F.	1,870
PLUMBING #	0		0
GARAGES & CARPORTS			5,100
EXTRA FEATURES			2,400
SUBTOTAL			135,090
GRADE FACTOR			100 %
UNADJUSTED VALUE			135,090
FACTOR			100 %

SKETCH

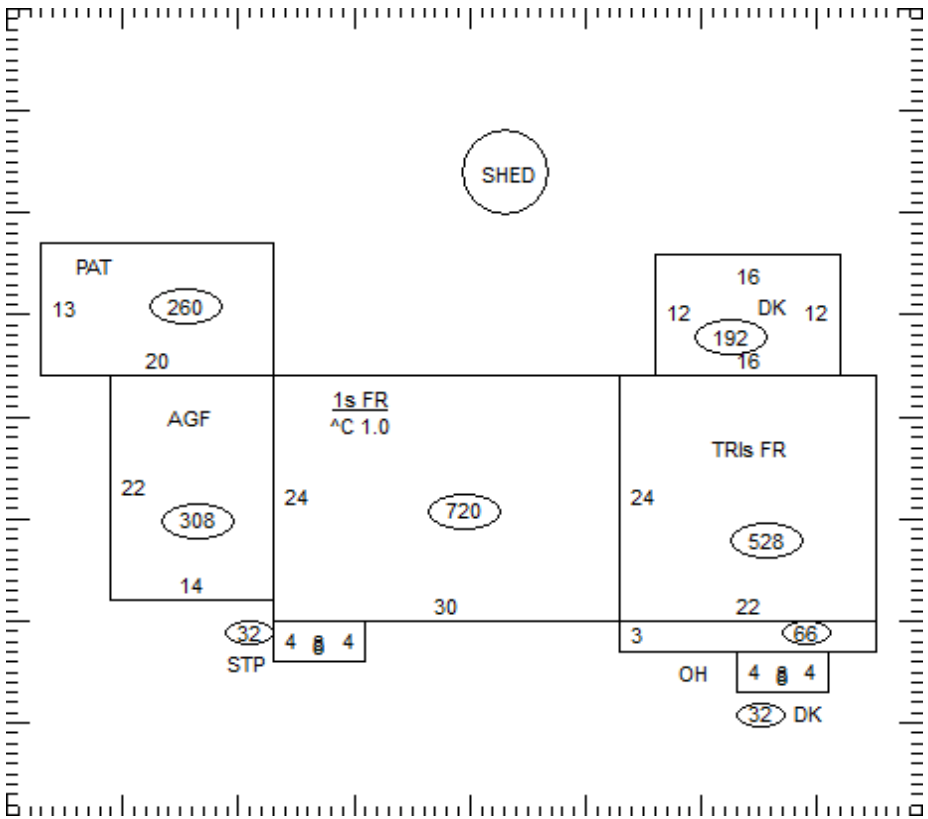

OCCUPANCY	ST.HT	SIZE	AREA	GRADE	PRICE	AGE	REMD	CND	UNADJ VAL	PHYS	PHYS VAL	FUNC	TRUE VAL
DWELLING	TRI	SK	1,776	C		1952	1974	A	135,090	40	81,050		81,100
1 Shed		8x10	80	C		2000		A		29			0
2													
3													
4													
5													
6													
7													
8													
9													
10													
11													
											TOTAL		81,100

02-009400.0000

COMMENTS

52 L/F OF BRICK-8' HIGH
Dwelling has an Economic Factor of 100%

02-009400.0000

MILLER KYLE S
MILLER KYLE S
5312 US RTE 127
CELINA, OH 45822

BUTLER TWP / CELINA SD

08-24-277-007

LEGAL INFORMATION
OLIGER ALLOTMENT

LOT#: 7

PROP. CLASS		
5	1	0

NEIGHBORHOOD	
000205-RS50	
M	11
B	
C	31

	OWNERSHIP	ADDRESS	CITY	STATE	ZIP	DATE	AMOUNT	DEED:CONV#	JS	VALID
1	BAKER SHIRLEY	5312 ST RTE 127	CELINA	OH	45822	08/11/2004	0	: 0	☐	☐
2	BAKER WILLIAM ETUX	5312 US RT 127	CELINA	OH	45822		0	: 0	☐	☐
3							0	0	☐	☐

X: ☐ TTO LISTER: DATE: 05/03/2013 TIME: 12:00:00 AM ☐ LETTER ☐ LETTER REC'D GIS CODE

STREET/ROAD	TOPOGRAPHY	PU-UTILITIES-PR	NEIGHBORHOOD	INFLUENCE FACTORS	
■ PAVED	■ LEVEL	☐ WATER ☐	☐ IMPROVING	☐ A. NO ROAD	☐ F. RESTRICT
☐ GRAVEL	☐ HIGH	☐ SEWER ☐	■ STATIC	☐ B. TOPGRHY	☐ G. WOOD LT
☐ DIRT	☐ LOW	☐ GAS ☐	☐ DECLINING	☐ C. Ex Front	☐ H. VACANCY
☐ SIDEWALKS	☐ ROLLING	☐ ELECTRIC ☐	☐ OLD	☐ D. QUANTITY	☐ I. WATER FRONT
☐ CURBS	☐ STANDARD	■ STANDARD	☐ STANDARD	☐ E. SZ/SHAPE	☐ J. OTHER/CDU

PROPERTY LOCATION
5312 US RT 127 , CELINA

COMMENT

LAND COMPUTATIONS

LAND TYPE	SIZE	M RATE C	INF	M VALUE C
Total Acres: .3700			TOTAL	10,700 0

VALUATION SUMMARY

VALUE YEAR									
REASON FOR CHANGE									
APPRAISED VALUE	LAND								
	IMPR								
	TOTAL								
ASSESSED VALUE	LAND								
	IMPR								
	TOTAL								

OCCUPANCY	EXTERIOR
☐ SNGL FMLY	☐ WOOD
☐ DUPLEX	☐ STUCCO
☐ TRIPLEX	☐ ALM/VYNL
☐ CONVR	☐ CONC BLK
☐ MOBILE HM	☐ METAL
☐ BI/L TRI/L	☐ BRICK
☐ MOD/MAN	☐ STONE

ROOFING	ROOF TYPE
☐ METAL	☐ GABLE
☐ SLT/TLE	☐ HIP
☐ SHINGLES	☐ GAMBREL
☐ SHAKES	☐ MANSARD
☐ COMPOSITE	☐ FLAT

FLOORS	B	1	2	3	U
CONCRETE	☐	☐	☐	☐	☐
WOOD	☐	☐	☐	☐	☐
TILE/COMPO	☐	☐	☐	☐	☐
CARPET	☐	☐	☐	☐	☐

INT. FINISH	B	1	2	3	U
PLASTER/DW	☐	☐	☐	☐	☐
PANELING	☐	☐	☐	☐	☐
UNFINISHED	☐	☐	☐	☐	☐

ACCOMMODATIONS					
# OF ROOMS					
BEDROOMS					
FIREPLACES					

HEAT & AC	B	1	2	3	U
NO HEAT	☐	☐	☐	☐	☐
CTRL HEAT	☐	☐	☐	☐	☐
HW/STEAM	☐	☐	☐	☐	☐
ELECTRIC	☐	☐	☐	☐	☐
HEAT PUMP	☐	☐	☐	☐	☐
FLR/WALL	☐	☐	☐	☐	☐
STVE/SPCE	☐	☐	☐	☐	☐
GEOTHERMAL	☐	☐	☐	☐	☐
OUTSIDE	☐	☐	☐	☐	☐
CTRL A/C	☐	☐	☐	☐	☐

PLUMBING	BASE ☐				
X FULL BATH					
X HALF BATH					
X FIXTURES					

FLOOR	AREA	CONST	VALUE

SUBTOTAL			0
MULTI-FAMILY #	0		0
BSMT FINISH	0	S.F.	0
FIREPLACE #	0		0
HEATING	0	S.F.	0
AIR COND	0	S.F.	0
PLUMBING #	0		0
GARAGES & CARPORTS			0
EXTRA FEATURES			0
SUBTOTAL			0
GRADE FACTOR			%
UNADJUSTED VALUE			0
FACTOR			%

SKETCH

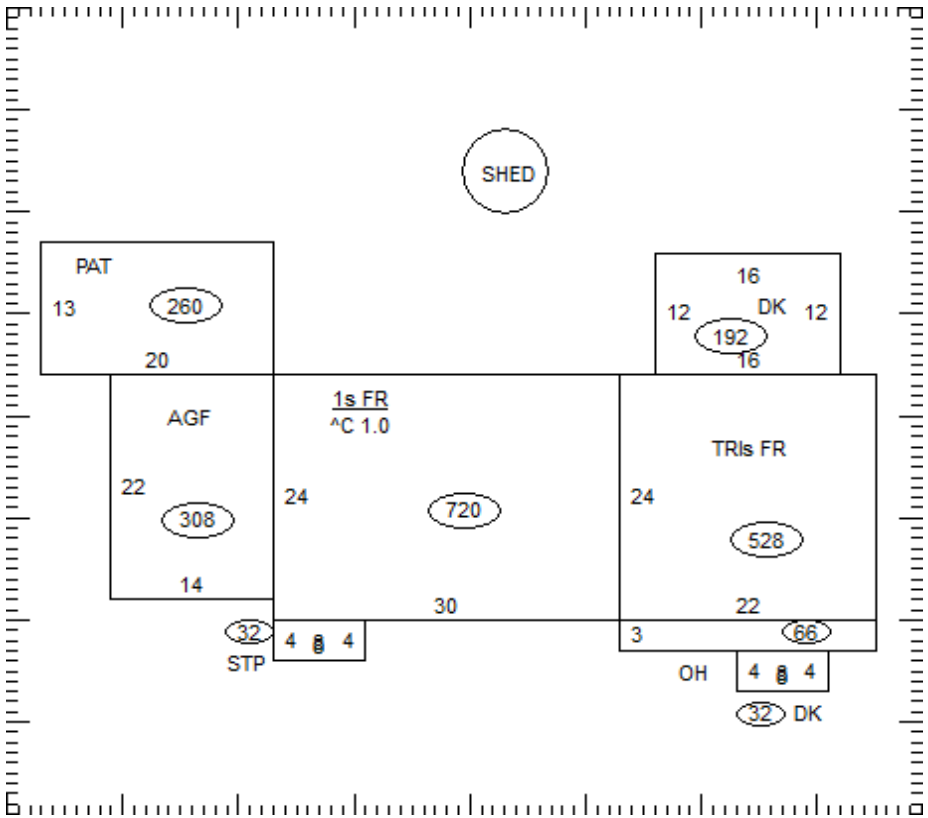

OCCUPANCY	ST.HT	SIZE	AREA	GRADE	PRICE	AGE	REMD	CND	UNADJ VAL	PHYS	PHYS VAL	FUNC	TRUE VAL
DWELLING		SK											
1													
2													
3													
4													
5													
6													
7													
8													
9													
10													
11													
												TOTAL	0

02-009400.0000

COMMENTS

52 L/F OF BRICK-8' HIGH