08-036600.0000

DUBLIN TWP-ROCKFORD CORP / PARKWAY SD
02-17-431-002

Property Class: 510
Neighborhood 000802-TM50
Map: 09
Block:
Card: 30
Bk: Pg:

SHELLABARGER CHAD W & WALKER DORIS
SHELLABARGER CHAD W & WALKER DORIS
408 W PEARL ST
ROCKFORD, OH 45882

LEGAL INFORMATION
LOT #306
AKA DAVIS ADD LOT #7

	OWNERSHIP	ADDRESS	CITY	STATE	ZIP	DATE	AMOUNT	DEED:CONV#	JS	VALID
1	SHELLABARGER CHAD W &	408 W PEARL ST	ROCKFORD	OH	45882	08/10/2020	133,900	WDC : 540	☐	■
2	FOX GARY L & ARMANDA M	408 W PEARL ST	ROCKFORD	OH	45882	03/06/2015	0	QCE : X : 0	☐	☐
3	CASPERSON AMANDA M	408 PEARL ST	ROCKFORD	OH	45882	07/02/2007	95,000	WDC : A : 461	☐	☐

X: ☐ TTO LISTER: RK DATE: 11/03/2004 TIME: 12:00:00 AM ☐ LETTER ■ LETTER REC'D GIS CODE

STREET/ROAD	TOPOGRAPHY	PU-UTILITIES-PR	NEIGHBORHOOD	INFLUENCE FACTORS
■ PAVED	■ LEVEL	■ WATER ☐	☐ IMPROVING	☐ A. NO ROAD ☐ F. RESTRICT
☐ GRAVEL	☐ HIGH	■ SEWER ☐	■ STATIC	☐ B. TOPGRHY ☐ G. WOOD LT
☐ DIRT	☐ LOW	☐ GAS ☐	☐ DECLINING	☐ C. Ex Front ☐ H. VACANCY
☐ SIDEWALKS	☐ ROLLING	■ ELECTRIC ☐	☐ OLD	☐ D. QUANTITY ☐ I. WATER FRONT
☐ CURBS	☐ STANDARD	☐ STANDARD	☐ STANDARD	☐ E. SZ/SHAPE ☐ J. OTHER/CDU

PROPERTY LOCATION
408 W PEARL ST, ROCKFORD

COMMENT
TY2019:Net Gen=$1,057.88, Other Assessment=$2.00
DE16 DESKTOP REVIEW CHG: cor wddk
TriDwell=118 TriOB=118 TriLand=118

LAND COMPUTATIONS

LAND TYPE	SIZE	M RATE C	INF	M VALUE C
F:Front	F66 D132	ST210 DP94 ADJ197		15,300 0
			TOTAL	15,300 0

VALUATION SUMMARY

VALUE YEAR		2020	2017	2016	2014	2011			
REASON FOR CHANGE		RAPP	RAPP	MISC	RAPP	RAPP			
APPRAISED VALUE	LAND	15,300	13,000	12,600	12,600	13,700			
	IMPR	74,000	58,600	55,700	56,400	61,400			
	TOTAL	89,300	71,600	68,300	69,000	75,100			
ASSESSED VALUE	LAND	5,360	4,550	4,410	4,410	4,800			
	IMPR	25,900	20,510	19,500	19,740	21,490			
	TOTAL	31,260	25,060	23,910	24,150	26,290			

OCCUPANCY	EXTERIOR
■SF ☐DU ☐TR	☐ WOOD
☐CONVERSION	☐ STUCCO
BUILDING TYPE	■ ALM/VYNL
☐ MOBILE HOME	☐ CONC BLK
☐ BI/TR LEVEL	☐ METAL
☐ MOD/MAN	☐ BRICK
☐ _____	☐ STONE

ROOFING	ROOF TYPE
☐ METAL	■ GABLE
☐ SLT/TLE	☐ HIP
■ SHINGLES	☐ GAMBREL
☐ SHAKES	☐ MANSARD
☐ COMPOSITE	☐ FLAT

FLOORS	B	1	2	3	U
CONCRETE	■	☐	☐	☐	☐
WOOD	☐	☐	☐	☐	☐
TILE/COMPO	☐	■	■	☐	☐
CARPET	☐	■	■	☐	☐

INT. FINISH	B	1	2	3	U
PLASTER/DW	☐	■	■	☐	☐
PANELING	☐	☐	☐	☐	☐
UNFINISHED	■	☐	☐	☐	☐

ACCOMMODATIONS					
# OF ROOMS		6	2		
BEDROOMS		2	2		
FIREPLACES					

HEAT & AC	B	1	2	3	U
NO HEAT	☐	☐	☐	☐	☐
CTRL HEAT	☐	■	■	☐	☐
HW/STEAM	☐	■	■	☐	☐
ELECTRIC	☐	☐	☐	☐	☐
HEAT PUMP	☐	☐	☐	☐	☐
FLR/WALL	☐	☐	☐	☐	☐
STVE/SPCE	☐	☐	☐	☐	☐
GEOTHERMAL	☐	☐	☐	☐	☐
OUTSIDE	☐	☐	☐	☐	☐
CTRL A/C	☐	☐	☐	☐	☐

PLUMBING	BASE ■				
X FULL BATH					
X HALF BATH		1			
X FIXTURES					

FLOOR	AREA	CONST	VALUE
1	1083	FR	99,180
.5	368	FR	24,600
BSMT	715		9,300
SUBTOTAL			133,080
MULTI-FAMILY #	0		0
BUILDING TYPE	100%		0
BSMT FINISH	0 S.F.		0
FIREPLACE #	0		0
HEATING	0 S.F.		0
AIR COND	0 S.F.		0
PLUMBING #	2		2,200
GARAGES & CARPORTS			0
EXTRA FEATURES			14,100
SUBTOTAL			0
GRADE FACTOR			107 %
UNADJUSTED VALUE			188,610
FACTOR			100 %

SKETCH

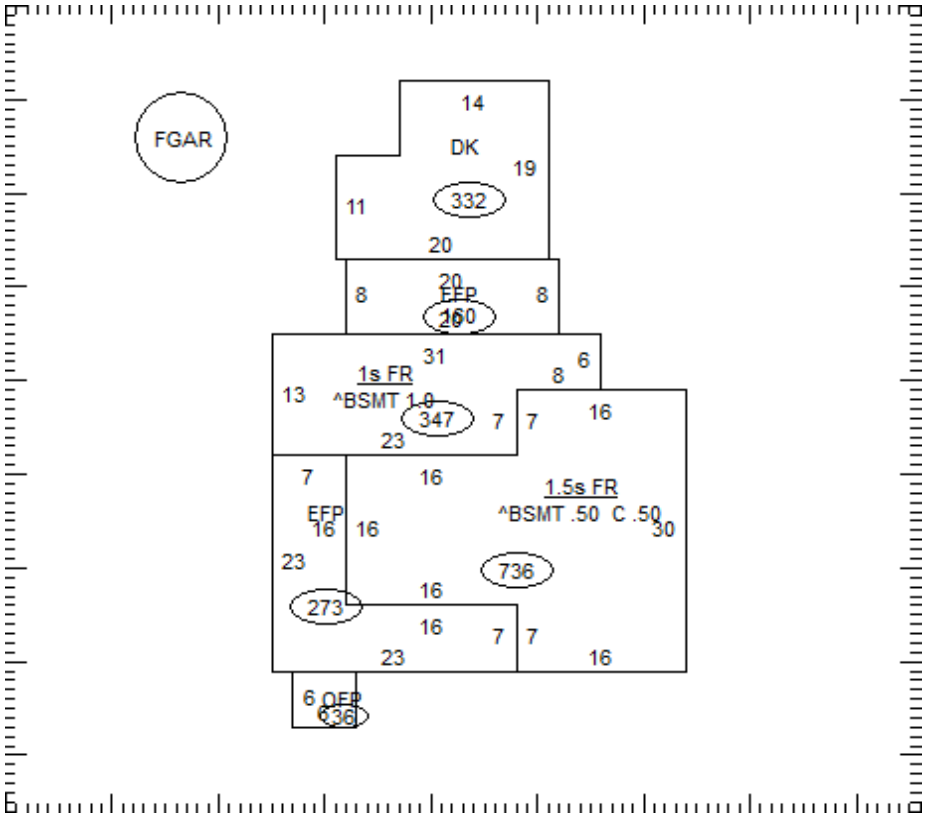

OCCUPANCY	ST.HT	SIZE	AREA	GRADE	PRICE	AGE	REMD	CND	UNADJ VAL	PHYS	PHYS VAL	FUNC	TRUE VAL
DWELLING	1.5	SK	1,451	C		1902		A	188,610	45	103,740		73,700
1 Gar - Frame		18x18	324	C	16.91	1930		A	6,460	95	320		300
2													
3													
4													
5													
6													
7													
8													
9													
10													
11													

08-036600.0000

TOTAL 74,000

COMMENTS

Dwelling has an Economic Factor of 71%

08-036600.0000

DUBLIN TWP-ROCKFORD CORP / PARKWAY SD

02-17-431-002

Property Class: 510

Neighborhood 000802-TM50

Map: 09
Block:
Card: 30

Bk: Pg:

SHELLABARGER CHAD W & WALKER DORIS
SHELLABARGER CHAD W & WALKER DORIS
408 W PEARL ST
ROCKFORD, OH 45882

LEGAL INFORMATION
LOT #306
AKA DAVIS ADD LOT #7

	OWNERSHIP	ADDRESS	CITY	STATE	ZIP	DATE	AMOUNT	DEED:CONV#	JS	VALID
1	WENNING NEIL E	408 W PEARL ST	ROCKFORD	OH	45882	07/21/1999	57,000	: A : 0	☐	■
2							0	0	☐	☐
3							0	0	☐	☐

X: ☐ TTO LISTER: RK DATE: 11/03/2004 TIME: 12:00:00 AM ☐ LETTER ■ LETTER REC'D GIS CODE

STREET/ROAD	TOPOGRAPHY	PU-UTILITIES-PR	NEIGHBORHOOD	INFLUENCE FACTORS
■ PAVED	■ LEVEL	■ WATER ☐	☐ IMPROVING	☐ A. NO ROAD ☐ F. RESTRICT
☐ GRAVEL	☐ HIGH	■ SEWER ☐	■ STATIC	☐ B. TOPGRHY ☐ G. WOOD LT
☐ DIRT	☐ LOW	☐ GAS ☐	☐ DECLINING	☐ C. Ex Front ☐ H. VACANCY
☐ SIDEWALKS	☐ ROLLING	■ ELECTRIC ☐	☐ OLD	☐ D. QUANTITY ☐ I. WATER FRONT
☐ CURBS	☐ STANDARD	☐ STANDARD	☐ STANDARD	☐ E. SZ/SHAPE ☐ J. OTHER/CDU

PROPERTY LOCATION
408 W PEARL ST, ROCKFORD

COMMENT

LAND COMPUTATIONS

LAND TYPE	SIZE	M	RATE	C	INF	M	VALUE	C
					TOTAL		15,300	0

VALUATION SUMMARY

VALUE YEAR									
REASON FOR CHANGE									
APPRAISED VALUE	LAND								
	IMPR								
	TOTAL								
ASSESSED VALUE	LAND								
	IMPR								
	TOTAL								

OCCUPANCY	EXTERIOR
☐SF ☐DU ☐TR	☐ WOOD
☐CONVERSION	☐ STUCCO
BUILDING TYPE	☐ ALM/VYNL
☐ MOBILE HOME	☐ CONC BLK
☐ BI/TR LEVEL	☐ METAL
☐ MOD/MAN	☐ BRICK
☐ _____	☐ STONE

ROOFING	ROOF TYPE
☐ METAL	☐ GABLE
☐ SLT/TLE	☐ HIP
☐ SHINGLES	☐ GAMBREL
☐ SHAKES	☐ MANSARD
☐ COMPOSITE	☐ FLAT

FLOORS	B	1	2	3	U
CONCRETE	☐	☐	☐	☐	☐
WOOD	☐	☐	☐	☐	☐
TILE/COMPO	☐	☐	☐	☐	☐
CARPET	☐	☐	☐	☐	☐

INT. FINISH	B	1	2	3	U
PLASTER/DW	☐	☐	☐	☐	☐
PANELING	☐	☐	☐	☐	☐
UNFINISHED	☐	☐	☐	☐	☐

ACCOMMODATIONS					
# OF ROOMS					
BEDROOMS					
FIREPLACES					

HEAT & AC	B	1	2	3	U
NO HEAT	☐	☐	☐	☐	☐
CTRL HEAT	☐	☐	☐	☐	☐
HW/STEAM	☐	☐	☐	☐	☐
ELECTRIC	☐	☐	☐	☐	☐
HEAT PUMP	☐	☐	☐	☐	☐
FLR/WALL	☐	☐	☐	☐	☐
STVE/SPCE	☐	☐	☐	☐	☐
GEOTHERMAL	☐	☐	☐	☐	☐
OUTSIDE	☐	☐	☐	☐	☐
CTRL A/C	☐	☐	☐	☐	☐

PLUMBING					BASE ☐
X FULL BATH					
X HALF BATH					
X FIXTURES					

FLOOR	AREA	CONST	VALUE

SUBTOTAL		0
MULTI-FAMILY #	0	0
BUILDING TYPE	000%	0
BSMT FINISH	0 S.F.	0
FIREPLACE #	0	0
HEATING	0 S.F.	0
AIR COND	0 S.F.	0
PLUMBING #	0	0
GARAGES & CARPORTS		0
EXTRA FEATURES		0
SUBTOTAL		0
GRADE FACTOR		%
UNADJUSTED VALUE		0
FACTOR		%

SKETCH

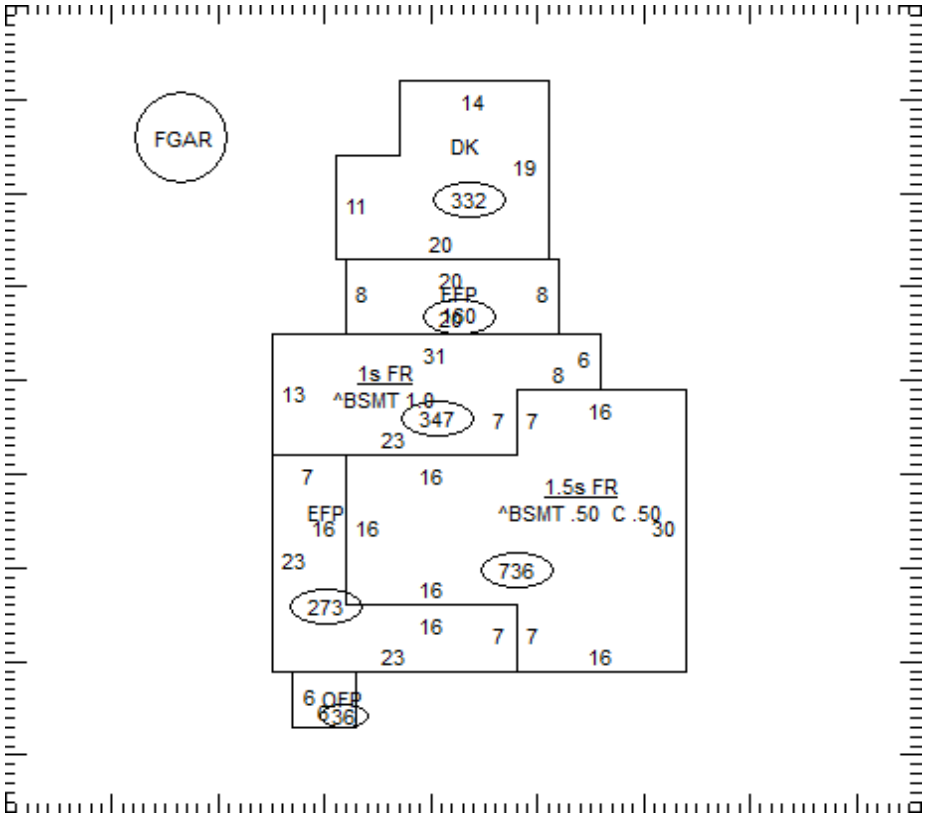

OCCUPANCY	ST.HT	SIZE	AREA	GRADE	PRICE	AGE	REMD	CND	UNADJ VAL	PHYS	PHYS VAL	FUNC	TRUE VAL
DWELLING		SK											
1													
2													
3													
4													
5													
6													
7													
8													
9													
10													
11													

08-036600.0000

TOTAL 0

COMMENTS