02-008800.0100

BUTLER TWP / CELINA SD

08-24-277-001

Property Class: 510

Neighborhood 000205-RS50

Map: 11
Block:
Card: 24A
Bk: Pg:

BRUNS RANDALL K & ROSEANN A

BRUNS RANDALL K & ROSEANN A
5360 US RTE 127
CELINA, OH 45822
Created in 2003 From - . 0 due to Split

LEGAL INFORMATION

COR SE NE

RTS: 002-06-24
Acres:0.7590

	OWNERSHIP	ADDRESS	CITY	STATE	ZIP	DATE	AMOUNT	DEED:CONV#	JS	VALID
1	BRUNS RANDALL K &	5360 US RTE 127	CELINA	OH	45822	05/09/2017	119,000	WDC : 287	☐	■
2	SMITH CAMERON JAMES	5360 US ROUTE 127	CELINA	OH	45822	09/12/2014	115,000	WDC : 603	☐	■
3	TEMPLE ROBERT & HEYNE	5360 US RTE 127	CELINA	OH	45822	03/01/2011	106,500	WDC : A : 75	☐	■

X: ☐ TTO LISTER: JO DATE: 04/06/2005 TIME: 12:00:00 AM ☐ LETTER ■ LETTER REC'D GIS CODE

STREET/ROAD	TOPOGRAPHY	PU-UTILITIES-PR	NEIGHBORHOOD	INFLUENCE FACTORS	
■ PAVED	■ LEVEL	☐ WATER ☐	☐ IMPROVING	☐ A. NO ROAD	☐ F. RESTRICT
☐ GRAVEL	☐ HIGH	☐ SEWER ☐	■ STATIC	☐ B. TOPGRHY	☐ G. WOOD LT
☐ DIRT	☐ LOW	☐ GAS ☐	☐ DECLINING	☐ C. Ex Front	☐ H. VACANCY
☐ SIDEWALKS	☐ ROLLING	☐ ELECTRIC ☐	☐ OLD	☐ D. QUANTITY	☐ I. WATER FRONT
☐ CURBS	☐ STANDARD	■ STANDARD	☐ STANDARD	☐ E. SZ/SHAPE	☐ J. OTHER/CDU

PROPERTY LOCATION

5360 US RT 127 ,

COMMENT

TY2019:Net Gen=$1,423.78, Other Assessment=$0.00
DE11 AD PB AND LT
DE09 CORR FP PER DATA MAILER
DE17 DESKTOP RVW CHG: ADD PATIO
TriDwell=105 TriOB=105 TriLand=105

LAND COMPUTATIONS

LAND TYPE	SIZE	M RATE C	INF	M VALUE C
HS:Home Site <1 @ 16500*0.94	AC:0.759	15510		16,300 0
Total Acres: .7590			TOTAL	16,300 0

VALUATION SUMMARY

VALUE YEAR		2020	2017	2017	2014	2011	2009		
REASON FOR CHANGE		RAPP	RAPP	MISC	RAPP	RAPP	MISC		
APPRAISED VALUE	LAND	16,300	15,500	14,100	14,100	14,100	14,100		
	IMPR	83,900	79,900	73,000	72,100	72,100	61,400		
	TOTAL	100,200	95,400	87,100	86,200	86,200	75,500		
ASSESSED VALUE	LAND	5,710	5,430	4,940	4,940	4,940	4,940		
	IMPR	29,370	27,970	25,550	25,240	25,240	21,490		
	TOTAL	35,080	33,400	30,490	30,180	30,180	26,430		

OCCUPANCY	EXTERIOR
■ SF ☐ DU ☐ TR	☐ WOOD
☐ CONVERSION	☐ STUCCO
BUILDING TYPE	■ ALM/VYNL
☐ MOBILE HOME	☐ CONC BLK
☐ BI/TR LEVEL	☐ METAL
☐ MOD/MAN	☐ BRICK
☐ _____	☐ STONE

ROOFING	ROOF TYPE
☐ METAL	■ GABLE
☐ SLT/TLE	☐ HIP
■ SHINGLES	☐ GAMBREL
☐ SHAKES	☐ MANSARD
☐ COMPOSITE	☐ FLAT

FLOORS	B	1	2	3	U
CONCRETE	■	☐	☐	☐	☐
WOOD	☐	☐	☐	☐	☐
TILE/COMPO	☐	■	☐	☐	☐
CARPET	☐	■	☐	☐	☐

INT. FINISH	B	1	2	3	U
PLASTER/DW	☐	☐	☐	☐	☐
PANELING	☐	■	☐	☐	☐
UNFINISHED	■	☐	☐	☐	☐

ACCOMMODATIONS					
# OF ROOMS		5			
BEDROOMS		2			
FIREPLACES		1			

HEAT & AC	B	1	2	3	U
NO HEAT	☐	☐	☐	☐	☐
CTRL HEAT	☐	■	☐	☐	☐
HW/STEAM	☐	☐	☐	☐	☐
ELECTRIC	☐	☐	☐	☐	☐
HEAT PUMP	☐	☐	☐	☐	☐
FLR/WALL	☐	☐	☐	☐	☐
STVE/SPCE	☐	☐	☐	☐	☐
GEOTHERMAL	☐	☐	☐	☐	☐
OUTSIDE	☐	☐	☐	☐	☐
CTRL A/C	☐	■	☐	☐	☐

PLUMBING	BASE ■				
X FULL BATH					
X HALF BATH					
X FIXTURES					

FLOOR	AREA	CONST	VALUE
1	1000	FR	91,580
BSMT	1000		13,000

SUBTOTAL		104,580
MULTI-FAMILY #	0	0
BUILDING TYPE	100%	0
BSMT FINISH	0 S.F.	0
FIREPLACE #	1	4,000
HEATING	0 S.F.	0
AIR COND	1,000 S.F.	1,500
PLUMBING #	0	0
GARAGES & CARPORTS		4,600
EXTRA FEATURES		2,800
SUBTOTAL		0
GRADE FACTOR		110 %
UNADJUSTED VALUE		135,690
FACTOR		100 %

SKETCH

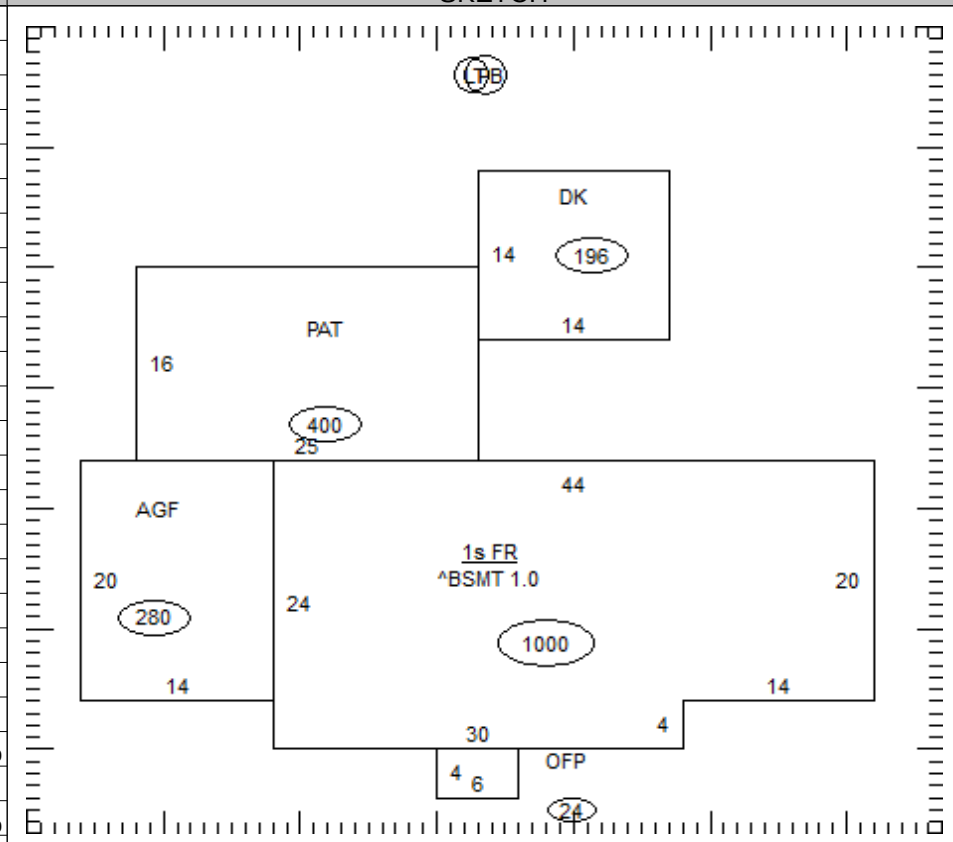

OCCUPANCY	ST.HT	SIZE	AREA	GRADE	PRICE	AGE	REMD	CND	UNADJ VAL	PHYS	PHYS VAL	FUNC	TRUE VAL
DWELLING	1	SK	1,000	C+		1948		A	135,690	45	74,630		74,600
1 Pole Bldg	10	26x54	1,404	C	9.36	1990		A	13,800	47	7,310		7,300
2 Lean - To		26x54	1,404	D	2.56	1990		A	3,770	48	1,960		2,000
3													
4													
5													
6													
7													
8													
9													
10													
11													
											TOTAL		83,900

02-008800.0100

COMMENTS

44 L/F OF BRICK TRIM-8' HIGH
Dwelling has an Economic Factor of 100%

02-008800.0100

BUTLER TWP / CELINA SD

08-24-277-001

Property Class: 510

Neighborhood 000205-RS50

Map: 11
Block:
Card: 24A
Bk: Pg:

BRUNS RANDALL K & ROSEANN A

BRUNS RANDALL K & ROSEANN A
5360 US RTE 127
CELINA, OH 45822
Created in 2003 From - . 0 due to Split

LEGAL INFORMATION

COR SE NE

RTS: 002-06-24
Acres:0.7590

	OWNERSHIP	ADDRESS	CITY	STATE	ZIP	DATE	AMOUNT	DEED:CONV#	JS	VALID
1	SCHNEIDER MICHAEL R &	5360 US RTE 127	CELINA	OH	45822	12/24/2008	96,000	WDC : A : 835	☐	■
2	LABRUN KEVIN L	5360 ST RTE 127	CELINA	OH	45822	12/19/2003	93,200	WDC : 0	☐	☐
3							0	0	☐	☐

X: ☐ TTO LISTER: JO DATE: 04/06/2005 TIME: 12:00:00 AM ☐ LETTER ■ LETTER REC'D GIS CODE

STREET/ROAD	TOPOGRAPHY	PU-UTILITIES-PR	NEIGHBORHOOD	INFLUENCE FACTORS	
■ PAVED	■ LEVEL	☐ WATER ☐	☐ IMPROVING	☐ A. NO ROAD	☐ F. RESTRICT
☐ GRAVEL	☐ HIGH	☐ SEWER ☐	■ STATIC	☐ B. TOPGRHY	☐ G. WOOD LT
☐ DIRT	☐ LOW	☐ GAS ☐	☐ DECLINING	☐ C. Ex Front	☐ H. VACANCY
☐ SIDEWALKS	☐ ROLLING	☐ ELECTRIC ☐	☐ OLD	☐ D. QUANTITY	☐ I. WATER FRONT
☐ CURBS	☐ STANDARD	■ STANDARD	☐ STANDARD	☐ E. SZ/SHAPE	☐ J. OTHER/CDU

PROPERTY LOCATION

5360 US RT 127 ,

COMMENT

LAND COMPUTATIONS

LAND TYPE	SIZE	M RATE C	INF	M VALUE C
Total Acres: .7590			TOTAL	16,300 0

VALUATION SUMMARY

VALUE YEAR									
REASON FOR CHANGE									
APPRAISED VALUE	LAND								
	IMPR								
	TOTAL								
ASSESSED VALUE	LAND								
	IMPR								
	TOTAL								

OCCUPANCY	EXTERIOR
☐SF ☐DU ☐TR	☐ WOOD
☐CONVERSION	☐ STUCCO
BUILDING TYPE	☐ ALM/VYNL
☐ MOBILE HOME	☐ CONC BLK
☐ BI/TR LEVEL	☐ METAL
☐ MOD/MAN	☐ BRICK
☐ _____	☐ STONE

ROOFING	ROOF TYPE
☐ METAL	☐ GABLE
☐ SLT/TLE	☐ HIP
☐ SHINGLES	☐ GAMBREL
☐ SHAKES	☐ MANSARD
☐ COMPOSITE	☐ FLAT

FLOORS	B	1	2	3	U
CONCRETE	☐	☐	☐	☐	☐
WOOD	☐	☐	☐	☐	☐
TILE/COMPO	☐	☐	☐	☐	☐
CARPET	☐	☐	☐	☐	☐

INT. FINISH	B	1	2	3	U
PLASTER/DW	☐	☐	☐	☐	☐
PANELING	☐	☐	☐	☐	☐
UNFINISHED	☐	☐	☐	☐	☐

ACCOMMODATIONS					
# OF ROOMS					
BEDROOMS					
FIREPLACES					

HEAT & AC	B	1	2	3	U
NO HEAT	☐	☐	☐	☐	☐
CTRL HEAT	☐	☐	☐	☐	☐
HW/STEAM	☐	☐	☐	☐	☐
ELECTRIC	☐	☐	☐	☐	☐
HEAT PUMP	☐	☐	☐	☐	☐
FLR/WALL	☐	☐	☐	☐	☐
STVE/SPCE	☐	☐	☐	☐	☐
GEOTHERMAL	☐	☐	☐	☐	☐
OUTSIDE	☐	☐	☐	☐	☐
CTRL A/C	☐	☐	☐	☐	☐

PLUMBING					BASE ☐
X FULL BATH					
X HALF BATH					
X FIXTURES					

FLOOR	AREA	CONST	VALUE

SUBTOTAL		0
MULTI-FAMILY #	0	0
BUILDING TYPE	000%	0
BSMT FINISH	0 S.F.	0
FIREPLACE #	0	0
HEATING	0 S.F.	0
AIR COND	0 S.F.	0
PLUMBING #	0	0
GARAGES & CARPORTS		0
EXTRA FEATURES		0
SUBTOTAL		0
GRADE FACTOR		%
UNADJUSTED VALUE		0
FACTOR		%

SKETCH

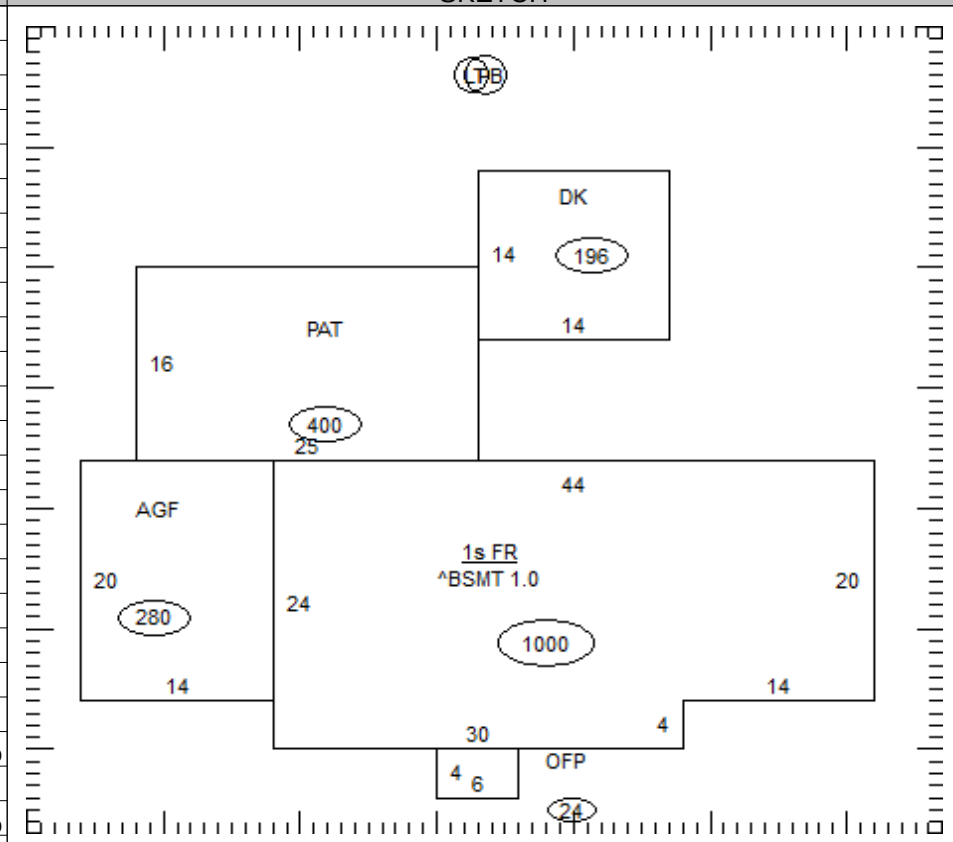

OCCUPANCY	ST.HT	SIZE	AREA	GRADE	PRICE	AGE	REMD	CND	UNADJ VAL	PHYS	PHYS VAL	FUNC	TRUE VAL
DWELLING		SK											
1													
2													
3													
4													
5													
6													
7													
8													
9													
10													
11													
												TOTAL	0

02-008800.0100

COMMENTS

44 L/F OF BRICK TRIM-8' HIGH