20-020100.0100

GRANVILLE TWP / ST HENRY SD

11-18-100-006

PROP. CLASS		
1	1	1

NEIGHBORHOOD
009201-A140
M
B
C

BRACKMAN KEITH M
BRACKMAN KEITH M
2774 TOWNSHIP LINE RD
SAINT HENRY, OH 45883
Created in 2016 From 20-020100.0000 due to Split

LEGAL INFORMATION
PT SE NW

RTS: 002-07-18
Acres:5.8610

QUALIFIED CREDITS: CAUV: 06267: 2017

	OWNERSHIP	ADDRESS	CITY	STATE	ZIP	DATE	AMOUNT	DEED:CONV#	JS	VALID
1	BRACKMAN KEITH M	2774 TOWNSHIP LINE RD	SAINT HENRY	OH	45883	04/04/2016	125,100	WDC : 200	☐	■
2							0	0	☐	☐
3							0	0	☐	☐

X: ☐ TTO LISTER: DATE: TIME: ☐ LETTER ☐ LETTER REC'D GIS CODE

STREET/ROAD	TOPOGRAPHY	PU-UTILITIES-PR	NEIGHBORHOOD	INFLUENCE FACTORS	
☐ PAVED	☐ LEVEL	☐ WATER ☐	☐ IMPROVING	☐ A. NO ROAD	☐ F. RESTRICT
☐ GRAVEL	☐ HIGH	☐ SEWER ☐	☐ STATIC	☐ B. TOPGRHY	☐ G. WOOD LT
☐ DIRT	☐ LOW	☐ GAS ☐	☐ DECLINING	☐ C. Ex Front	☐ H. VACANCY
☐ SIDEWALKS	☐ ROLLING	☐ ELECTRIC ☐	☐ OLD	☐ D. QUANTITY	☐ I. WATER FRONT
☐ CURBS	☐ STANDARD	☐ STANDARD	☐ STANDARD	☐ E. SZ/SHAPE	☐ J. OTHER/CDU

PROPERTY LOCATION
2774 TOWNSHIP LINE RD,

COMMENT
TY2018:Net Gen=$2,818.66, Other Assessment=$2.88 (Mod CR:)120

LAND COMPUTATIONS

LAND TYPE	SIZE	M RATE C	INF	M VALUE C
CR:Crop Land TOTAL	**A 4.8610**	**10,097 1,982**		**47,020 7,700**
0070	A 2.0610	10,140 1,955		20,900 4,030
0078	A 2.2000	8,770 800		19,290 1,760
0087	A .6000	11,380 3,190		6,830 1,910
HS:Home Site:0601	A 1.0000	16,500 16,500		16,500 16,500
Total Acres: 5.8610			TOTAL	63,520 24,200

VALUATION SUMMARY

VALUE YEAR		2017	2017	2017	2017				
REASON FOR CHANGE		CAUV	RAPP	CAUV	MISC				
APPRAISED VALUE	LAND	24,200	63,520	26,390	51,180				
	IMPR	172,400	172,400	189,400	189,400				
	TOTAL	196,600	235,920	215,790	240,580				
ASSESSED VALUE	LAND	8,470	22,230	9,240	17,910				
	IMPR	60,340	60,340	66,290	66,290				
	TOTAL	68,810	82,570	75,530	84,200				
CAUV TAX SAVINGS		2018=563.66, 2017=567.36, 2016=0.00: Total=1131.02							

OCCUPANCY	EXTERIOR
■ SNGL FMLY	☐ WOOD
☐ DUPLEX	☐ STUCCO
☐ TRIPLEX	■ ALM/VYNL
☐ CONVR	☐ CONC BLK
☐ MOBILE HM	☐ METAL
☐ BI/L TRI/L	☐ BRICK
☐ MOD/MAN	☐ STONE

ROOFING	ROOF TYPE
☐ METAL	■ GABLE
☐ SLT/TLE	☐ HIP
■ SHINGLES	☐ GAMBREL
☐ SHAKES	☐ MANSARD
☐ COMPOSITE	☐ FLAT

FLOORS	B	1	2	3	U
CONCRETE	■	☐	☐	☐	☐
WOOD	☐	■	■	☐	☐
TILE/COMPO	☐	☐	☐	☐	☐
CARPET	☐	☐	☐	☐	☐

INT. FINISH	B	1	2	3	U
PLASTER/DW	☐	■	■	☐	☐
PANELING	☐	☐	☐	☐	☐
UNFINISHED	☐	☐	☐	☐	☐

ACCOMMODATIONS					
# OF ROOMS		5	3		
BEDROOMS		1	3		
FIREPLACES					

HEAT & AC	B	1	2	3	U
NO HEAT	☐	☐	☐	☐	☐
CTRL HEAT	■	■	■	☐	☐
HW/STEAM	☐	☐	☐	☐	☐
ELECTRIC	☐	☐	☐	☐	☐
HEAT PUMP	☐	☐	☐	☐	☐
FLR/WALL	☐	☐	☐	☐	☐
STVE/SPCE	☐	☐	☐	☐	☐
GEOTHERMAL	☐	☐	☐	☐	☐
OUTSIDE	☐	☐	☐	☐	☐
CTRL A/C	☐	■	☐	☐	☐

PLUMBING	BASE ■				
X FULL BATH					
X HALF BATH					
X FIXTURES					

FLOOR	AREA	CONST	VALUE
1	1287	FR	108,130
.25	154	FR	9,820
BSMT	468		6,080
SUBTOTAL			124,030
MULTI-FAMILY #	0		0
BSMT FINISH	0 S.F.		0
FIREPLACE #	0		0
HEATING	0 S.F.		0
AIR COND	1,287 S.F.		1,930
PLUMBING #	0		0
GARAGES & CARPORTS			8,000
EXTRA FEATURES			700
SUBTOTAL			134,660
GRADE FACTOR			100 %
UNADJUSTED VALUE			134,660
FACTOR			100 %

SKETCH

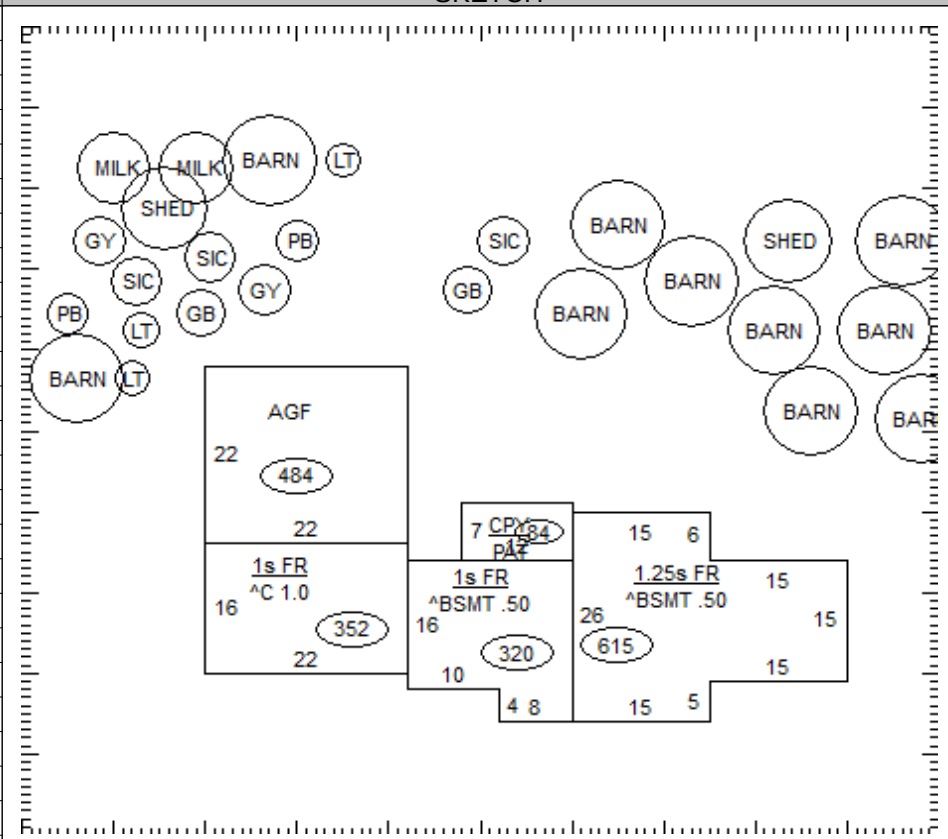

OCCUPANCY	ST.HT	SIZE	AREA	GRADE	PRICE	AGE	REMD	CND	UNADJ VAL	PHYS	PHYS VAL	FUNC	TRUE VAL
DWELLING	1.25	SK	1,441	C		1900		A	134,660	45	74,060		88,900
1 Grain Bin		21x24	504	C		1994		A		37			0
2 Barn	10	12x16	192	D	6.40	1983		A	1,230	58	520		500
3 Barn	15	44x72	3,168	C	8.00	1976		A	25,340	77	5,830		5,800
4 Barn	8	20x52	1,040	D	6.40	1970		A	6,660	80	1,330		1,300
5 Lean - To	8	36x36	1,296	C	3.20	1900		A	4,150	95	210		200
6 Barn	10	40x56	2,240	C	8.00	1966		A	17,920	85	2,690		2,700
7 Lean - To	6	14x36	504	D	2.56	1900		A	1,290	95	60		100
8 Silo - Concrete	60	60x20	1,200	C	500.00	1983		F	500		500		500
9 Silo - Concrete	60	60x20	1,200	C	500.00	1976		A	500		500		500
10 Grain Bin	10	18x15	270	C		1967		P		85			0
11 Shed	12	30x52	1,560	C	4.00	1977		P	6,240	70	1,870		1,900
												TOTAL	102,400

20-020100.0100

COMMENTS

Dwelling has an Economic Factor of 120%

20-020100.0100

GRANVILLE TWP / ST HENRY SD

11-18-100-006

PROP. CLASS		
1	1	1

NEIGHBORHOOD
009201-A140
M
B
C

BRACKMAN KEITH M

BRACKMAN KEITH M
2774 TOWNSHIP LINE RD
SAINT HENRY, OH 45883
Created in 2016 From 20-020100.0000 due to Split

LEGAL INFORMATION

PT SE NW

RTS: 002-07-18
Acres:5.8610

QUALIFIED CREDITS: CAUV: 06267: 2017

	OWNERSHIP	ADDRESS	CITY	STATE	ZIP	DATE	AMOUNT	DEED:CONV#	JS	VALID
1	BRACKMAN KEITH M	2774 TOWNSHIP LINE RD	SAINT HENRY	OH	45883	04/04/2016	125,100	WDC : 200	☐	■
2							0	0	☐	☐
3							0	0	☐	☐

X: ☐ TTO LISTER: DATE: TIME: ☐ LETTER ☐ LETTER REC'D GIS CODE

STREET/ROAD	TOPOGRAPHY	PU-UTILITIES-PR		NEIGHBORHOOD	INFLUENCE FACTORS	
☐ PAVED	☐ LEVEL	☐ WATER	☐	☐ IMPROVING	☐ A. NO ROAD	☐ F. RESTRICT
☐ GRAVEL	☐ HIGH	☐ SEWER	☐	☐ STATIC	☐ B. TOPGRHY	☐ G. WOOD LT
☐ DIRT	☐ LOW	☐ GAS	☐	☐ DECLINING	☐ C. Ex Front	☐ H. VACANCY
☐ SIDEWALKS	☐ ROLLING	☐ ELECTRIC	☐	☐ OLD	☐ D. QUANTITY	☐ I. WATER FRONT
☐ CURBS	☐ STANDARD	☐ STANDARD		☐ STANDARD	☐ E. SZ/SHAPE	☐ J. OTHER/CDU

PROPERTY LOCATION

2774 TOWNSHIP LINE RD,

COMMENT

LAND COMPUTATIONS

LAND TYPE	SIZE	M	RATE	C	INF	M	VALUE	C
Total Acres: 5.8610					TOTAL		63,520	24,200

VALUATION SUMMARY

VALUE YEAR									
REASON FOR CHANGE									
APPRAISED VALUE	LAND								
	IMPR								
	TOTAL								
ASSESSED VALUE	LAND								
	IMPR								
	TOTAL								
CAUV TAX SAVINGS	2018=563.66, 2017=567.36, 2016=0.00: Total=1131.02								

OCCUPANCY	EXTERIOR
☐ SNGL FMLY	☐ WOOD
☐ DUPLEX	☐ STUCCO
☐ TRIPLEX	☐ ALM/VYNL
☐ CONVR	☐ CONC BLK
☐ MOBILE HM	☐ METAL
☐ BI/L TRI/L	☐ BRICK
☐ MOD/MAN	☐ STONE

ROOFING	ROOF TYPE
☐ METAL	☐ GABLE
☐ SLT/TLE	☐ HIP
☐ SHINGLES	☐ GAMBREL
☐ SHAKES	☐ MANSARD
☐ COMPOSITE	☐ FLAT

FLOORS	B	1	2	3	U
CONCRETE	☐	☐	☐	☐	☐
WOOD	☐	☐	☐	☐	☐
TILE/COMPO	☐	☐	☐	☐	☐
CARPET	☐	☐	☐	☐	☐

INT. FINISH	B	1	2	3	U
PLASTER/DW	☐	☐	☐	☐	☐
PANELING	☐	☐	☐	☐	☐
UNFINISHED	☐	☐	☐	☐	☐

ACCOMMODATIONS					
# OF ROOMS					
BEDROOMS					
FIREPLACES					

HEAT & AC	B	1	2	3	U
NO HEAT	☐	☐	☐	☐	☐
CTRL HEAT	☐	☐	☐	☐	☐
HW/STEAM	☐	☐	☐	☐	☐
ELECTRIC	☐	☐	☐	☐	☐
HEAT PUMP	☐	☐	☐	☐	☐
FLR/WALL	☐	☐	☐	☐	☐
STVE/SPCE	☐	☐	☐	☐	☐
GEOTHERMAL	☐	☐	☐	☐	☐
OUTSIDE	☐	☐	☐	☐	☐
CTRL A/C	☐	☐	☐	☐	☐

PLUMBING	BASE ☐				
X FULL BATH					
X HALF BATH					
X FIXTURES					

FLOOR	AREA	CONST	VALUE

SUBTOTAL		0
MULTI-FAMILY #	0	0
BSMT FINISH	0 S.F.	0
FIREPLACE #	0	0
HEATING	0 S.F.	0
AIR COND	0 S.F.	0
PLUMBING #	0	0
GARAGES & CARPORTS		0
EXTRA FEATURES		0
SUBTOTAL		0
GRADE FACTOR		%
UNADJUSTED VALUE		0
FACTOR		%

SKETCH

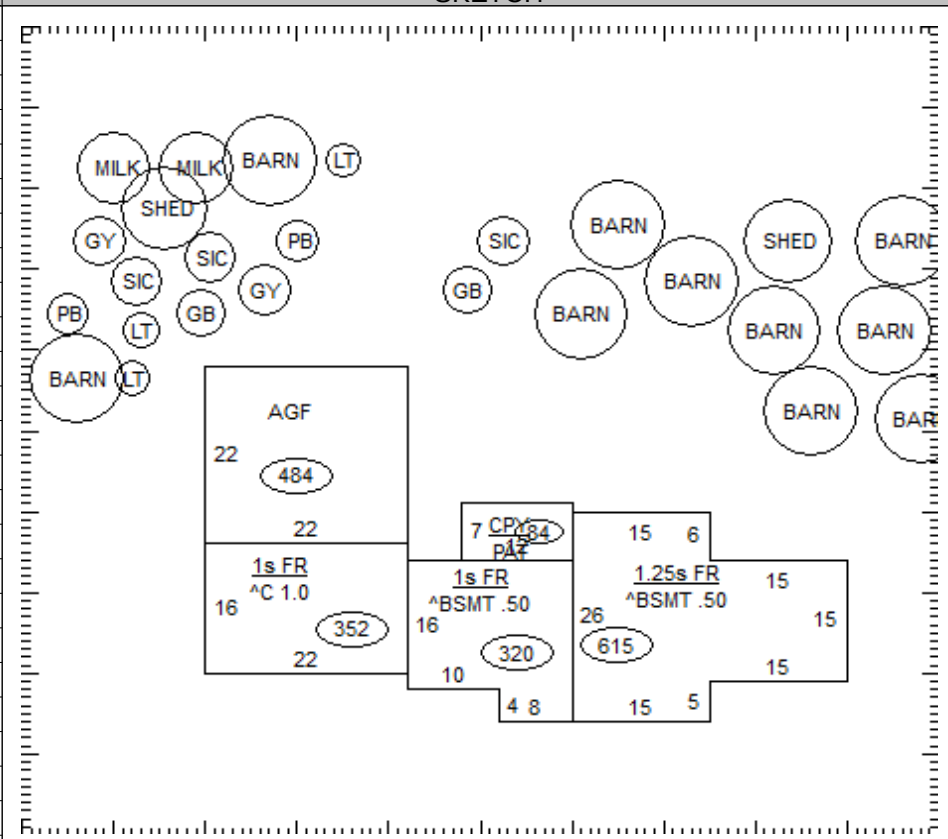

OCCUPANCY	ST.HT	SIZE	AREA	GRADE	PRICE	AGE	REMD	CND	UNADJ VAL	PHYS	PHYS VAL	FUNC	TRUE VAL
DWELLING		SK											
1 Barn	10	60x36	2,160	D	6.40	1900		A	13,820	95	690	DFLT50	300
2 Pole Bldg	14	16x65	1,040	C	8.75	1978		A	9,100	67	3,000		3,000
3 Barn	10	26x16	416	D	6.40	1964		A	2,660	85	400		400
4 Milk House / Par	7	16x26	416	C	12.00	1900		A	4,990	95	250	DFLT50	100
5 Granary		14x24	336	C	7.00	1900		P	2,350	95	120		100
6 Barn	10	18x33	594	D	6.40	1979		A	3,800	68	1,220		1,200
7 Granary		18x30	540	C	7.00	1900		P	3,780	95	190	DFLT50	100
8 Lean - To	8	38x31	1,178	C	3.20	1900		A	3,770	95	190		200
9 Barn	12	24x60	1,440	D	6.40	1985		A	9,220	58	3,870		3,900
10 Barn	10	32x42	1,344	D	6.40	1978		A	8,600	68	2,750		2,800
11 Silo - Concrete	60	60x20	1,200	C	500.00	1950		A	500		500		500
												TOTAL	12,600

20-020100.0100

COMMENTS

20-020100.0100

GRANVILLE TWP / ST HENRY SD

11-18-100-006

PROP. CLASS		
1	1	1

NEIGHBORHOOD
009201-A140

M	
B	
C	

BRACKMAN KEITH M
BRACKMAN KEITH M
2774 TOWNSHIP LINE RD
SAINT HENRY, OH 45883
Created in 2016 From 20-020100.0000 due to Split

LEGAL INFORMATION
PT SE NW

RTS: 002-07-18
Acres:5.8610

QUALIFIED CREDITS: CAUV: 06267: 2017

	OWNERSHIP	ADDRESS	CITY	STATE	ZIP	DATE	AMOUNT	DEED:CONV#	JS	VALID
1	BRACKMAN KEITH M	2774 TOWNSHIP LINE RD	SAINT HENRY	OH	45883	04/04/2016	125,100	WDC : 200	☐	■
2							0	0	☐	☐
3							0	0	☐	☐

X: ☐ TTO LISTER: DATE: TIME: ☐ LETTER ☐ LETTER REC'D GIS CODE

STREET/ROAD	TOPOGRAPHY	PU-UTILITIES-PR		NEIGHBORHOOD	INFLUENCE FACTORS	
☐ PAVED	☐ LEVEL	☐ WATER	☐	☐ IMPROVING	☐ A. NO ROAD	☐ F. RESTRICT
☐ GRAVEL	☐ HIGH	☐ SEWER	☐	☐ STATIC	☐ B. TOPGRHY	☐ G. WOOD LT
☐ DIRT	☐ LOW	☐ GAS	☐	☐ DECLINING	☐ C. Ex Front	☐ H. VACANCY
☐ SIDEWALKS	☐ ROLLING	☐ ELECTRIC	☐	☐ OLD	☐ D. QUANTITY	☐ I. WATER FRONT
☐ CURBS	☐ STANDARD	☐ STANDARD		☐ STANDARD	☐ E. SZ/SHAPE	☐ J. OTHER/CDU

PROPERTY LOCATION
2774 TOWNSHIP LINE RD,

COMMENT

LAND COMPUTATIONS

LAND TYPE	SIZE	M	RATE	C	INF	M	VALUE	C
Total Acres: 5.8610					TOTAL		63,520	24,200

VALUATION SUMMARY

VALUE YEAR									
REASON FOR CHANGE									
APPRAISED VALUE	LAND								
	IMPR								
	TOTAL								
ASSESSED VALUE	LAND								
	IMPR								
	TOTAL								
CAUV TAX SAVINGS	2018=563.66, 2017=567.36, 2016=0.00: Total=1131.02								

OCCUPANCY	EXTERIOR
☐ SNGL FMLY	☐ WOOD
☐ DUPLEX	☐ STUCCO
☐ TRIPLEX	☐ ALM/VYNL
☐ CONVR	☐ CONC BLK
☐ MOBILE HM	☐ METAL
☐ BI/L TRI/L	☐ BRICK
☐ MOD/MAN	☐ STONE

ROOFING	ROOF TYPE
☐ METAL	☐ GABLE
☐ SLT/TLE	☐ HIP
☐ SHINGLES	☐ GAMBREL
☐ SHAKES	☐ MANSARD
☐ COMPOSITE	☐ FLAT

FLOORS	B	1	2	3	U
CONCRETE	☐	☐	☐	☐	☐
WOOD	☐	☐	☐	☐	☐
TILE/COMPO	☐	☐	☐	☐	☐
CARPET	☐	☐	☐	☐	☐

INT. FINISH	B	1	2	3	U
PLASTER/DW	☐	☐	☐	☐	☐
PANELING	☐	☐	☐	☐	☐
UNFINISHED	☐	☐	☐	☐	☐

ACCOMMODATIONS					
# OF ROOMS					
BEDROOMS					
FIREPLACES					

HEAT & AC	B	1	2	3	U
NO HEAT	☐	☐	☐	☐	☐
CTRL HEAT	☐	☐	☐	☐	☐
HW/STEAM	☐	☐	☐	☐	☐
ELECTRIC	☐	☐	☐	☐	☐
HEAT PUMP	☐	☐	☐	☐	☐
FLR/WALL	☐	☐	☐	☐	☐
STVE/SPCE	☐	☐	☐	☐	☐
GEOTHERMAL	☐	☐	☐	☐	☐
OUTSIDE	☐	☐	☐	☐	☐
CTRL A/C	☐	☐	☐	☐	☐

PLUMBING	BASE ☐				
X FULL BATH					
X HALF BATH					
X FIXTURES					

FLOOR	AREA	CONST	VALUE

SUBTOTAL		0
MULTI-FAMILY #	0	0
BSMT FINISH	0 S.F.	0
FIREPLACE #	0	0
HEATING	0 S.F.	0
AIR COND	0 S.F.	0
PLUMBING #	0	0
GARAGES & CARPORTS		0
EXTRA FEATURES		0
SUBTOTAL		0
GRADE FACTOR		%
UNADJUSTED VALUE		0
FACTOR		%

SKETCH

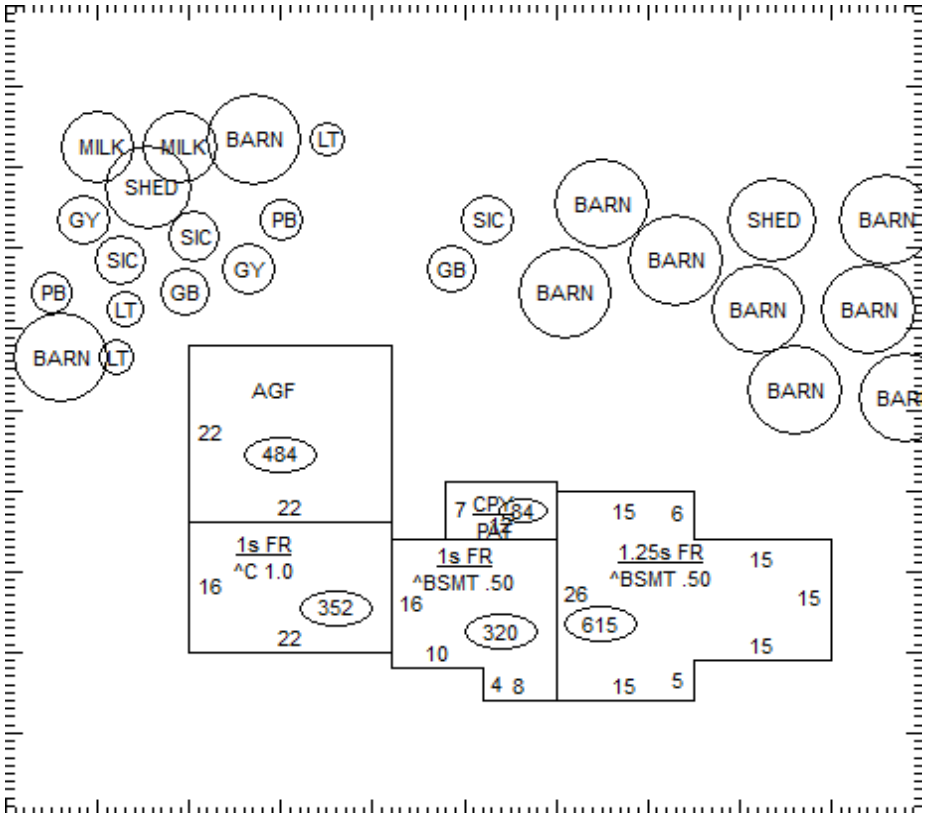

OCCUPANCY	ST.HT	SIZE	AREA	GRADE	PRICE	AGE	REMD	CND	UNADJ VAL	PHYS	PHYS VAL	FUNC	TRUE VAL
DWELLING		SK											
1 Milk House / Par	8	6x10	60	C	12.00	1976		A	720	77	170		200
2 Barn	13	65x124	8,060	D	6.40	2012		A	51,580	7	47,970		48,000
3 Shed		8x10	80	C		1990		A		47			0
4 Pole Bldg		30x70	2,100	C	8.30	1990		A	17,430	47	9,240		9,200
5													
6													
7													
8													
9													
10													
11													
											TOTAL		57,400

20-020100.0100

COMMENTS