17-054100.0000

RAMMEL KRYSTAL
RAMMEL KRYSTAL
305 GEORGE ST
FORT RECOVERY, OH 45846

GIBSON TWP-FT RECOVERY CORP / FT RECOVERY SD
13-16-103-001

LEGAL INFORMATION
HICKORY CIRCLE SUBDIV
ALSO 1/2 VAC ALLEY
LOT#: 20

PROP. CLASS		
5	1	0

NEIGHBORHOOD	
001704-TS40	
M	04C
B	
C	64

	OWNERSHIP	ADDRESS	CITY	STATE	ZIP	DATE	AMOUNT	DEED:CONV#	JS	VALID
1	RAMMEL KRYSTAL	305 GEORGE ST	FORT RECOVERY	OH	45846	10/02/2017	153,500	WDC : 666	☐	■
2	HEITKAMP CHARLES	305 GEORGE ST	FORT RECOVERY	OH	45846	07/14/2011	120,000	WDC : A : 352	☐	■
3	DUES NICHOLAS J	305 GEORGE ST	FT RECOVERY	OH	45846	10/21/2002	95,000	: A : 0	☐	■

X: ☐ TTO LISTER: NS DATE: 09/24/2004 TIME: 03:43:04 PM ■ LETTER ■ LETTER REC'D GIS CODE

STREET/ROAD	TOPOGRAPHY	PU-UTILITIES-PR	NEIGHBORHOOD	INFLUENCE FACTORS	
■ PAVED	■ LEVEL	☐ WATER ☐	☐ IMPROVING	☐ A. NO ROAD	☐ F. RESTRICT
☐ GRAVEL	☐ HIGH	☐ SEWER ☐	☐ STATIC	☐ B. TOPGRHY	☐ G. WOOD LT
☐ DIRT	☐ LOW	☐ GAS ☐	☐ DECLINING	☐ C. Ex Front	☐ H. VACANCY
☐ SIDEWALKS	☐ ROLLING	☐ ELECTRIC ☐	☐ OLD	☐ D. QUANTITY	☐ I. WATER FRONT
☐ CURBS	☐ STANDARD	■ STANDARD	☐ STANDARD	☐ E. SZ/SHAPE	☐ J. OTHER/CDU

PROPERTY LOCATION
305 GEORGE ST, FT RECOVERY

COMMENT
TY2018:Net Gen=$1,735.36, Other Assessment=$0.48
DE18 RMV OWN OCC. Did not return app

LAND COMPUTATIONS

LAND TYPE	SIZE	M RATE C	INF	M VALUE C
F:Front	F90 D156	ST190 DP102 ADJ194		17,500 0
R:Rear	F123 FD164 RD8	ST190 DP3 ADJ6		700 0
			TOTAL	18,200 0

VALUATION SUMMARY

VALUE YEAR		2017	2016	2016	2014	2011			
REASON FOR CHANGE		RAPP	MISC	MISC	RAPP	RAPP			
APPRAISED VALUE	LAND	18,200	18,200	17,800	17,500	17,500			
	IMPR	98,400	95,900	95,900	95,900	95,900			
	TOTAL	116,600	114,100	113,700	113,400	113,400			
ASSESSED VALUE	LAND	6,370	6,370	6,230	6,130	6,130			
	IMPR	34,440	33,570	33,570	33,570	33,570			
	TOTAL	40,810	39,940	39,800	39,700	39,700			

OCCUPANCY	EXTERIOR
■ SNGL FMLY	■ WOOD
☐ DUPLEX	☐ STUCCO
☐ TRIPLEX	■ ALM/VYNL
☐ CONVR	☐ CONC BLK
☐ MOBILE HM	☐ METAL
☐ BI/L TRI/L	■ BRICK
☐ MOD/MAN	☐ STONE

ROOFING	ROOF TYPE
☐ METAL	■ GABLE
☐ SLT/TLE	☐ HIP
■ SHINGLES	☐ GAMBREL
☐ SHAKES	☐ MANSARD
☐ COMPOSITE	☐ FLAT

FLOORS	B	1	2	3	U
CONCRETE	☐	☐	☐	☐	☐
WOOD	☐	■	☐	☐	☐
TILE/COMPO	☐	☐	☐	☐	☐
CARPET	☐	■	☐	☐	☐

INT. FINISH	B	1	2	3	U
PLASTER/DW	☐	■	☐	☐	☐
PANELING	☐	☐	☐	☐	☐
UNFINISHED	☐	☐	☐	☐	☐

ACCOMMODATIONS					
# OF ROOMS		6			
BEDROOMS		3			
FIREPLACES		1			

HEAT & AC	B	1	2	3	U
NO HEAT	☐	☐	☐	☐	☐
CTRL HEAT	☐	■	☐	☐	☐
HW/STEAM	☐	☐	☐	☐	☐
ELECTRIC	☐	☐	☐	☐	☐
HEAT PUMP	☐	☐	☐	☐	☐
FLR/WALL	☐	☐	☐	☐	☐
STVE/SPCE	☐	☐	☐	☐	☐
GEOTHERMAL	☐	☐	☐	☐	☐
OUTSIDE	☐	☐	☐	☐	☐
CTRL A/C	☐	☐	☐	☐	☐

PLUMBING					BASE ■
X FULL BATH		1			
X HALF BATH					
X FIXTURES					

FLOOR	AREA	CONST	VALUE
1	1482	FR	116,570

SUBTOTAL		116,570
MULTI-FAMILY #	0	0
BSMT FINISH	0 S.F.	0
FIREPLACE #	1	4,000
HEATING	0 S.F.	0
AIR COND	0 S.F.	0
PLUMBING #	3	3,300
GARAGES & CARPORTS		11,400
EXTRA FEATURES		6,200
SUBTOTAL		141,470
GRADE FACTOR		105 %
UNADJUSTED VALUE		148,540
FACTOR		100 %

SKETCH

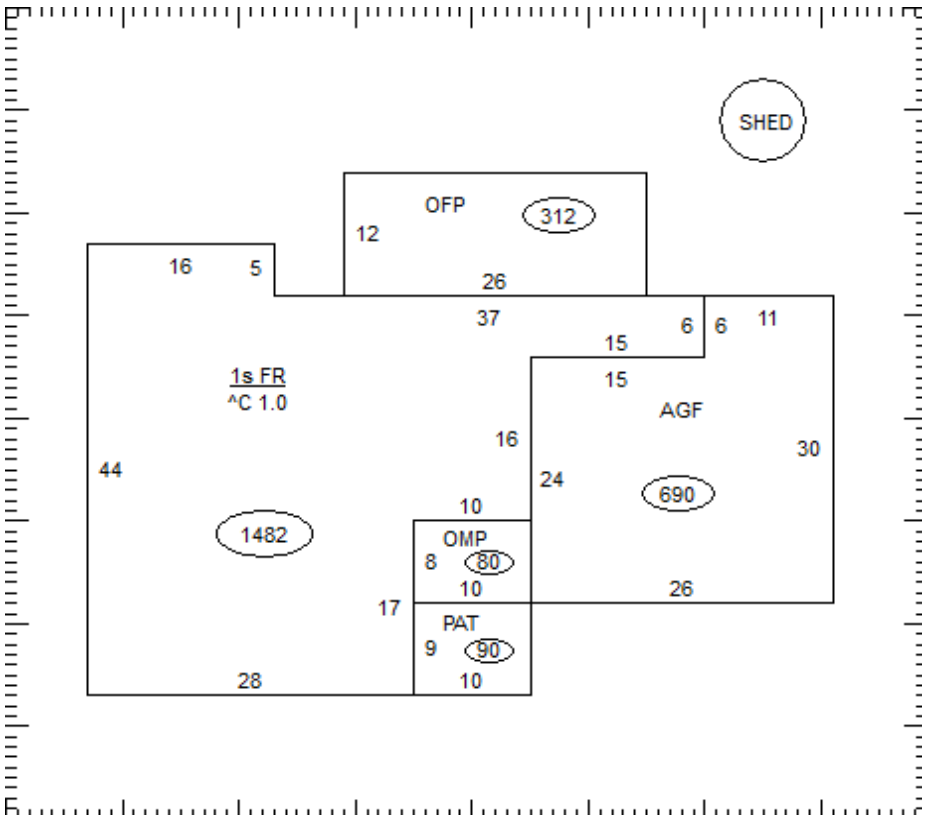

OCCUPANCY	ST.HT	SIZE	AREA	GRADE	PRICE	AGE	REMD	CND	UNADJ VAL	PHYS	PHYS VAL	FUNC	TRUE VAL
DWELLING	1	SK	1,482	C+		1977		A	148,540	28	106,950		98,400
1 Shed	PP	10x14	140	C						100			0
2													
3													
4													
5													
6													
7													
8													
9													
10													
11													

17-054100.0000

TOTAL 98,400

COMMENTS

70 L/F X 8 BRK TRM
Dwelling has an Economic Factor of 92%