09-068100.0106

FRANKLIN TWP / CELINA SD

09-22-226-009

| PROP. CLASS | | |
|---|---|---|
| 5 | 1 | 0 |

| NEIGHBORHOOD | |
|---|---|
| 095CL80-CL80 | |
| M | 03 A |
| B | |
| C | 118 |

**SCHAEKEL MICHAEL D & WENDEL LISA J**
SCHAEKEL MICHAEL D & WENDEL LISA J
5417 LAKE DR
CELINA, OH 45822

**LEGAL INFORMATION**
DIAMOND POINT SUBD

LOT#: 6

| | OWNERSHIP | ADDRESS | CITY | STATE | ZIP | DATE | AMOUNT | DEED:CONV# | JS | VALID |
|---|---|---|---|---|---|---|---|---|---|---|
| 1 | SCHAEKEL MICHAEL D & | 5417 LAKE DR | CELINA | OH | 45822 | 07/15/2016 | 155,000 | WDC : 473 | ☐ | ■ |
| 2 | MILLIGAN SANDRA J | 737 CHAMPAGNE AVE | BOWLING GREEN | OH | 43402 | 01/30/2006 | 275,000 | WDC : A : 70 | ☐ | ☐ |
| 3 | BUCKEYE SECURITY | 1805 CANAL RD | ST MARYS | OH | 45885 | 11/22/2000 | 259,900 | : A : 0 | ☐ | ■ |

X: ☐ TTO LISTER: DATE: 08/18/2009 TIME: 12:00:00 AM ☐ LETTER ☐ LETTER REC'D GIS CODE

| STREET/ROAD | TOPOGRAPHY | PU-UTILITIES-PR | | NEIGHBORHOOD | INFLUENCE FACTORS | |
|---|---|---|---|---|---|---|
| ■ PAVED | ■ LEVEL | ☐ WATER | ☐ | ☐ IMPROVING | ☐ A. NO ROAD | ☐ F. RESTRICT |
| ☐ GRAVEL | ☐ HIGH | ☐ SEWER | ☐ | ■ STATIC | ☐ B. TOPGRHY | ☐ G. WOOD LT |
| ☐ DIRT | ☐ LOW | ☐ GAS | ☐ | ☐ DECLINING | ☐ C. Ex Front | ☐ H. VACANCY |
| ☐ SIDEWALKS | ☐ ROLLING | ☐ ELECTRIC | ☐ | ☐ OLD | ☐ D. QUANTITY | ☐ I. WATER FRONT |
| ☐ CURBS | ☐ STANDARD | ■ STANDARD | | ☐ STANDARD | ☐ E. SZ/SHAPE | ☐ J. OTHER/CDU |

PROPERTY LOCATION
5417 LAKE DR,

COMMENT
TY2018:Net Gen=$3,038.64, Other Assessment=$0.00
BUCKEYE SECURITY STORAGE
DE19 NOH; RMV WDDK, ADD PAT & OFP, ADD BR GAR
DE09 ADD FP/PER DATA MAILER
CHANNEL LOT
DE17 DESKTOP REVIEW//ADD PATIO

LAND COMPUTATIONS

| LAND TYPE | SIZE | M RATE C | INF | M VALUE C |
|---|---|---|---|---|
| F:Front | F81 D129 | ST450 DP93 ADJ419 | | 33,900 0 |
| | | | TOTAL | 33,900 0 |

VALUATION SUMMARY

| | | | | | | | | | |
|---|---|---|---|---|---|---|---|---|---|
| VALUE YEAR | | 2019 | 2017 | 2017 | 2014 | 2011 | 2009 | | |
| REASON FOR CHANGE | | NC | RAPP | MISC | RAPP | RAPP | MISC | | |
| APPRAISED VALUE | LAND | 33,900 | 33,900 | 42,500 | 42,500 | 37,700 | 45,200 | | |
| | IMPR | 180,300 | 158,500 | 146,200 | 146,000 | 155,300 | 187,200 | | |
| | TOTAL | 214,200 | 192,400 | 188,700 | 188,500 | 193,000 | 232,400 | | |
| ASSESSED VALUE | LAND | 11,870 | 11,870 | 14,880 | 14,880 | 13,200 | 15,820 | | |
| | IMPR | 63,110 | 55,480 | 51,170 | 51,100 | 54,360 | 65,520 | | |
| | TOTAL | 74,980 | 67,350 | 66,050 | 65,980 | 67,560 | 81,340 | | |

| OCCUPANCY | EXTERIOR |
|---|---|
| ■ SNGL FMLY | ☐ WOOD |
| ☐ DUPLEX | ☐ STUCCO |
| ☐ TRIPLEX | ☐ ALM/VYNL |
| ☐ CONVR | ☐ CONC BLK |
| ☐ MOBILE HM | ☐ METAL |
| ☐ BI/L TRI/L | ■ BRICK |
| ☐ MOD/MAN | ☐ STONE |

| ROOFING | ROOF TYPE |
|---|---|
| ☐ METAL | ■ GABLE |
| ☐ SLT/TLE | ☐ HIP |
| ■ SHINGLES | ☐ GAMBREL |
| ☐ SHAKES | ☐ MANSARD |
| ☐ COMPOSITE | ☐ FLAT |

| FLOORS | B | 1 | 2 | 3 | U |
|---|---|---|---|---|---|
| CONCRETE | ☐ | ☐ | ☐ | ☐ | ☐ |
| WOOD | ☐ | ☐ | ☐ | ☐ | ☐ |
| TILE/COMPO | ☐ | ■ | ■ | ☐ | ☐ |
| CARPET | ☐ | ■ | ■ | ☐ | ☐ |

| INT. FINISH | B | 1 | 2 | 3 | U |
|---|---|---|---|---|---|
| PLASTER/DW | ☐ | ■ | ■ | ☐ | ☐ |
| PANELING | ☐ | ☐ | ☐ | ☐ | ☐ |
| UNFINISHED | ☐ | ☐ | ☐ | ☐ | ☐ |

| ACCOMMODATIONS | | | | | |
|---|---|---|---|---|---|
| # OF ROOMS | | 3 | 3 | | |
| BEDROOMS | | | 3 | | |
| FIREPLACES | | 1 | | | |

| HEAT & AC | B | 1 | 2 | 3 | U |
|---|---|---|---|---|---|
| NO HEAT | ☐ | ☐ | ☐ | ☐ | ☐ |
| CTRL HEAT | ☐ | ■ | ■ | ☐ | ☐ |
| HW/STEAM | ☐ | ☐ | ☐ | ☐ | ☐ |
| ELECTRIC | ☐ | ☐ | ☐ | ☐ | ☐ |
| HEAT PUMP | ☐ | ☐ | ☐ | ☐ | ☐ |
| FLR/WALL | ☐ | ☐ | ☐ | ☐ | ☐ |
| STVE/SPCE | ☐ | ☐ | ☐ | ☐ | ☐ |
| GEOTHERMAL | ☐ | ☐ | ☐ | ☐ | ☐ |
| OUTSIDE | ☐ | ☐ | ☐ | ☐ | ☐ |
| CTRL A/C | ☐ | ■ | ■ | ☐ | ☐ |

| PLUMBING | | | BASE | ■ | |
|---|---|---|---|---|---|
| X FULL BATH | | | 2 | | |
| X HALF BATH | | | | | |
| X FIXTURES | | | | | |

| FLOOR | AREA | CONST | VALUE |
|---|---|---|---|
| 1 | 1021 | BRK | 100,050 |
| 2ND | 1021 | BRK | 48,030 |

| | | | |
|---|---|---|---|
| SUBTOTAL | | | 148,080 |
| MULTI-FAMILY # | 0 | | 0 |
| BSMT FINISH | 0 | S.F. | 0 |
| FIREPLACE # | 1 | | 4,000 |
| HEATING | 0 | S.F. | 0 |
| AIR COND | 2,042 | S.F. | 3,060 |
| PLUMBING # | 6 | | 6,600 |
| GARAGES & CARPORTS | | | 8,600 |
| EXTRA FEATURES | | | 8,500 |
| SUBTOTAL | | | 178,840 |
| GRADE FACTOR | | | 115 % |
| UNADJUSTED VALUE | | | 205,670 |
| FACTOR | | | 100 % |

SKETCH

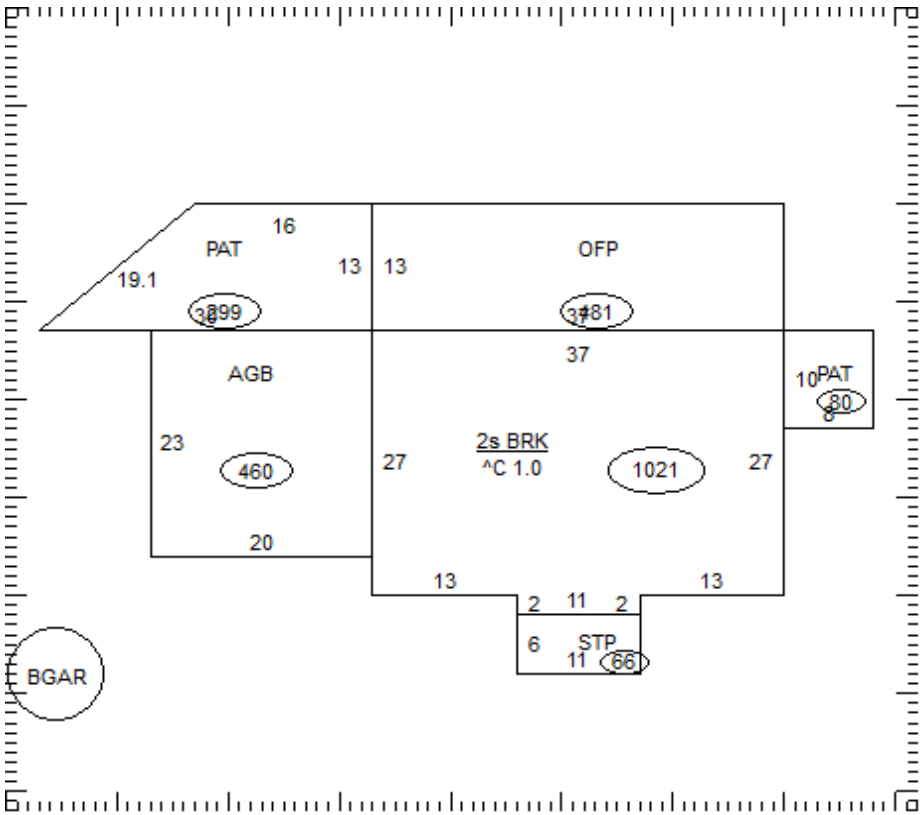


| OCCUPANCY | ST.HT | SIZE | AREA | GRADE | PRICE | AGE | REMD | CND | UNADJ VAL | PHYS | PHYS VAL | FUNC | TRUE VAL |
|---|---|---|---|---|---|---|---|---|---|---|---|---|---|
| DWELLING | 2 | SK | 2,042 | B- | | 1998 | | A | 205,670 | 16 | 172,760 | | 160,700 |
| 1 Gar - Brick | | 30x35 | 1,050 | C | 19.05 | 2018 | | A | 20,000 | 2 | 19,600 | | 19,600 |
| 2 | | | | | | | | | | | | | |
| 3 | | | | | | | | | | | | | |
| 4 | | | | | | | | | | | | | |
| 5 | | | | | | | | | | | | | |
| 6 | | | | | | | | | | | | | |
| 7 | | | | | | | | | | | | | |
| 8 | | | | | | | | | | | | | |
| 9 | | | | | | | | | | | | | |
| 10 | | | | | | | | | | | | | |
| 11 | | | | | | | | | | | | | |
| | | | | | | | | | | | TOTAL | | 180,300 |

09-068100.0106

COMMENTS

Dwelling has an Economic Factor of 93%