09-063400.0112

ALBERS JACK H & VICTORIA A

ALBERS JACK H & VICTORIA A
5297 PRAIRIE VIEW DR
CELINA, OH 45822

FRANKLIN TWP / CELINA SD

LEGAL INFORMATION
AQUA VIEW ESTATES

LOT#: 12

09-21-277-012

QUALIFIED CREDITS:
HOMESTEAD

PROP. CLASS		
5	1	0

NEIGHBORHOOD	
095CL40-CL80	
M	04A
B	
C	65

	OWNERSHIP	ADDRESS	CITY	STATE	ZIP	DATE	AMOUNT	DEED:CONV#	JS	VALID
1	ALBERS JACK H & VICTORIA A	5297 PRAIRIE VIEW DR	CELINA	OH	45822	02/24/2017	271,000	WDC : 123	☐	■
2	MILEY JASON P TRUSTEE	4777 W BUCKSKIN DR	Eloy	AZ	85131	03/12/2015	0	QCE : X : 0	☐	☐
3	MILEY JACK N & CINDY S	5297 PRAIRIE VIEW DR	CELINA	OH	45822	07/02/2001	275,000	: A : 0	☐	■

X: ☐ TTO LISTER: DATE: 06/01/2012 TIME: 12:00:00 AM ☐ LETTER ☐ LETTER REC'D GIS CODE

STREET/ROAD	TOPOGRAPHY	PU-UTILITIES-PR		NEIGHBORHOOD	INFLUENCE FACTORS	
■ PAVED	■ LEVEL	☐ WATER	☐	■ IMPROVING	☐ A. NO ROAD	☐ F. RESTRICT
☐ GRAVEL	☐ HIGH	☐ SEWER	☐	☐ STATIC	☐ B. TOPGRHY	☐ G. WOOD LT
☐ DIRT	☐ LOW	☐ GAS	☐	☐ DECLINING	☐ C. Ex Front	☐ H. VACANCY
☐ SIDEWALKS	☐ ROLLING	☐ ELECTRIC	☐	☐ OLD	☐ D. QUANTITY	☐ I. WATER FRONT
☐ CURBS	☐ STANDARD	■ STANDARD		☐ STANDARD	☐ E. SZ/SHAPE	☐ J. OTHER/CDU

PROPERTY LOCATION
5297 PRAIRIE VIEW DR, CELINA

COMMENT
TY2018:Net Gen=$3,747.42, Other Assessment=$0.00
DE12 CORR FL MISMATCH
DE11 CORR GRADE AND COND
DE18 REMOVE OWN OCC didn't return app

LAND COMPUTATIONS

LAND TYPE	SIZE	M RATE C	INF	M VALUE C
F:Front	F91 D131	ST440 DP93 ADJ409		37,200 0
			TOTAL	37,200 0

VALUATION SUMMARY

VALUE YEAR		2017	2017	2014	2012	2011			
REASON FOR CHANGE		RAPP	MISC	RAPP	MISC	RAPP			
APPRAISED VALUE	LAND	37,200	47,800	47,800	42,300	42,300			
	IMPR	225,100	238,500	233,400	248,300	249,200			
	TOTAL	262,300	286,300	281,200	290,600	291,500			
ASSESSED VALUE	LAND	13,020	16,730	16,730	14,810	14,810			
	IMPR	78,790	83,480	81,690	86,910	87,220			
	TOTAL	91,810	100,210	98,420	101,720	102,030			

OCCUPANCY	EXTERIOR
■ SNGL FMLY	☐ WOOD
☐ DUPLEX	☐ STUCCO
☐ TRIPLEX	■ ALM/VYNL
☐ CONVR	☐ CONC BLK
☐ MOBILE HM	☐ METAL
☐ BI/L TRI/L	■ BRICK
☐ MOD/MAN	☐ STONE

ROOFING	ROOF TYPE
☐ METAL	☐ GABLE
☐ SLT/TLE	■ HIP
■ SHINGLES	☐ GAMBREL
☐ SHAKES	☐ MANSARD
☐ COMPOSITE	☐ FLAT

FLOORS	B	1	2	3	U
CONCRETE	■	☐	☐	☐	☐
WOOD	☐	☐	☐	☐	☐
TILE/COMPO	■	■	☐	☐	☐
CARPET	☐	■	☐	☐	☐

INT. FINISH	B	1	2	3	U
PLASTER/DW	■	■	☐	☐	☐
PANELING	☐	☐	☐	☐	☐
UNFINISHED	☐	☐	☐	☐	☐

ACCOMMODATIONS					
# OF ROOMS	3	4			
BEDROOMS	1	2			
FIREPLACES					

HEAT & AC	B	1	2	3	U
NO HEAT	☐	☐	☐	☐	☐
CTRL HEAT	■	■	☐	☐	☐
HW/STEAM	☐	☐	☐	☐	☐
ELECTRIC	☐	☐	☐	☐	☐
HEAT PUMP	☐	☐	☐	☐	☐
FLR/WALL	☐	☐	☐	☐	☐
STVE/SPCE	☐	☐	☐	☐	☐
GEOTHERMAL	☐	☐	☐	☐	☐
OUTSIDE	☐	☐	☐	☐	☐
CTRL A/C	■	■	☐	☐	☐

PLUMBING					BASE ■
X FULL BATH	1	1			
X HALF BATH		1			
X FIXTURES		1			

FLOOR	AREA	CONST	VALUE
1	1641	BRK	131,180
BSMT	1641		21,330
SUBTOTAL			152,510
MULTI-FAMILY #	0		0
BSMT FINISH	1,000 S.F.		13,000
FIREPLACE #	0		0
HEATING	0 S.F.		0
AIR COND	2,641 S.F.		3,960
PLUMBING #	9		9,900
GARAGES & CARPORTS			15,500
EXTRA FEATURES			10,800
SUBTOTAL			205,670
GRADE FACTOR			125 %
UNADJUSTED VALUE			257,090
FACTOR			100 %

SKETCH

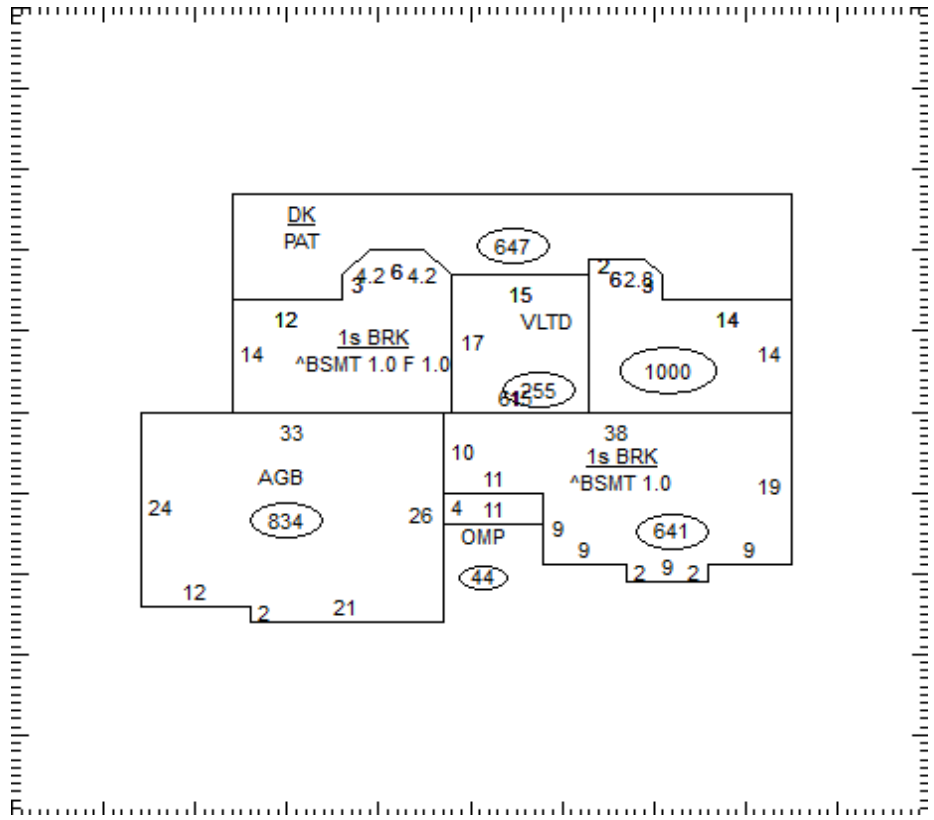

OCCUPANCY	ST.HT	SIZE	AREA	GRADE	PRICE	AGE	REMD	CND	UNADJ VAL	PHYS	PHYS VAL	FUNC	TRUE VAL
DWELLING	1	SK	1,641	B+		2000		A	257,090	15	218,530		225,100
1													
2													
3													
4													
5													
6													
7													
8													
9													
10													
11													
											TOTAL		225,100

09-063400.0112

COMMENTS

Dwelling has an Economic Factor of 103%