08-032400.0000

MILLISOR THOMAS JAMES
MILLISOR THOMAS JAMES
208 STATE ST
ROCKFORD, OH 45882

DUBLIN TWP-ROCKFORD CORP / PARKWAY SD
02-16-326-003

LEGAL INFORMATION
STREET ADDITION
ALSO 1/2 VACATED ST TO SOUTH
LOT#: 266

PROP. CLASS		
5	1	0

NEIGHBORHOOD	
000802-TM50	
M	09
B	
C	50

	OWNERSHIP	ADDRESS	CITY	STATE	ZIP	DATE	AMOUNT	DEED:CONV#	JS	VALID
1	MILLISOR THOMAS JAMES	208 STATE ST	ROCKFORD	OH	45882	09/25/2017	88,500	WDC : 652	☐	■
2	MAXWELL SHELLY	208 STATE ST	ROCKFORD	OH	45882	11/02/2015	81,900	WDC : 758	☐	■
3	OSBORN CRAIG L	9215 VALLEY FOREGE PL	FORT WAYNE	IN	46835	11/15/2012	0	QCE : X : 0	☐	☐

X: Signature | ☐ TTO | LISTER: RK | DATE: 11/10/2004 | TIME: 12:20:51 PM | ■ LETTER | ☐ LETTER REC'D | GIS CODE

STREET/ROAD	TOPOGRAPHY	PU-UTILITIES-PR	NEIGHBORHOOD	INFLUENCE FACTORS	
■ PAVED	■ LEVEL	☐ WATER ☐	☐ IMPROVING	☐ A. NO ROAD	☐ F. RESTRICT
☐ GRAVEL	☐ HIGH	☐ SEWER ☐	■ STATIC	☐ B. TOPGRHY	☐ G. WOOD LT
☐ DIRT	☐ LOW	☐ GAS ☐	☐ DECLINING	☐ C. Ex Front	☐ H. VACANCY
☐ SIDEWALKS	☐ ROLLING	☐ ELECTRIC ☐	☐ OLD	☐ D. QUANTITY	☐ I. WATER FRONT
☐ CURBS	☐ STANDARD	■ STANDARD	☐ STANDARD	☐ E. SZ/SHAPE	☐ J. OTHER/CDU

PROPERTY LOCATION
208 STATE ST, ROCKFORD

COMMENT
TY2018:Net Gen=$1,119.80, Other Assessment=$2.00
DE16 DESKTOP REVIEW CHG: ADD RFX & PP POOL
DE18 REMOVE OWN OCC didn't return app

LAND COMPUTATIONS

LAND TYPE	SIZE	M RATE C	INF	M VALUE C
F:Front	F91 D132	ST210 DP94 ADJ197		17,900 0
			TOTAL	17,900 0

VALUATION SUMMARY

VALUE YEAR		2017	2016	2014	2011				
REASON FOR CHANGE		RAPP	MISC	RAPP	RAPP				
APPRAISED VALUE	LAND	17,900	17,300	17,300	18,800				
	IMPR	57,700	56,700	56,300	61,200				
	TOTAL	75,600	74,000	73,600	80,000				
ASSESSED VALUE	LAND	6,270	6,060	6,060	6,580				
	IMPR	20,200	19,850	19,710	21,420				
	TOTAL	26,470	25,910	25,770	28,000				

OCCUPANCY	EXTERIOR
■ SNGL FMLY	☐ WOOD
☐ DUPLEX	☐ STUCCO
☐ TRIPLEX	■ ALM/VYNL
☐ CONVR	☐ CONC BLK
☐ MOBILE HM	☐ METAL
☐ BI/L TRI/L	☐ BRICK
☐ MOD/MAN	☐ STONE

ROOFING	ROOF TYPE
☐ METAL	■ GABLE
☐ SLT/TLE	☐ HIP
■ SHINGLES	☐ GAMBREL
☐ SHAKES	☐ MANSARD
☐ COMPOSITE	☐ FLAT

FLOORS	B	1	2	3	U
CONCRETE	☐	☐	☐	☐	☐
WOOD	☐	■	☐	☐	☐
TILE/COMPO	☐	☐	☐	☐	☐
CARPET	☐	■	☐	☐	☐

INT. FINISH	B	1	2	3	U
PLASTER/DW	☐	■	☐	☐	☐
PANELING	☐	☐	☐	☐	☐
UNFINISHED	☐	☐	☐	☐	☐

ACCOMMODATIONS					
# OF ROOMS		5			
BEDROOMS		2			
FIREPLACES					

HEAT & AC	B	1	2	3	U
NO HEAT	☐	☐	☐	☐	☐
CTRL HEAT	☐	■	☐	☐	☐
HW/STEAM	☐	☐	☐	☐	☐
ELECTRIC	☐	☐	☐	☐	☐
HEAT PUMP	☐	☐	☐	☐	☐
FLR/WALL	☐	☐	☐	☐	☐
STVE/SPCE	☐	☐	☐	☐	☐
GEOTHERMAL	☐	☐	☐	☐	☐
OUTSIDE	☐	☐	☐	☐	☐
CTRL A/C	☐	■	☐	☐	☐

PLUMBING					BASE ■
X FULL BATH					
X HALF BATH					
X FIXTURES					

FLOOR	AREA	CONST	VALUE
1	988	FR	95,480

SUBTOTAL			95,480
MULTI-FAMILY #	0		0
BSMT FINISH	0	S.F.	0
FIREPLACE #	0		0
HEATING	0	S.F.	0
AIR COND	988	S.F.	1,480
PLUMBING #	0		0
GARAGES & CARPORTS			8,600
EXTRA FEATURES			3,500
SUBTOTAL			109,060
GRADE FACTOR			100 %
UNADJUSTED VALUE			109,060
FACTOR			100 %

SKETCH

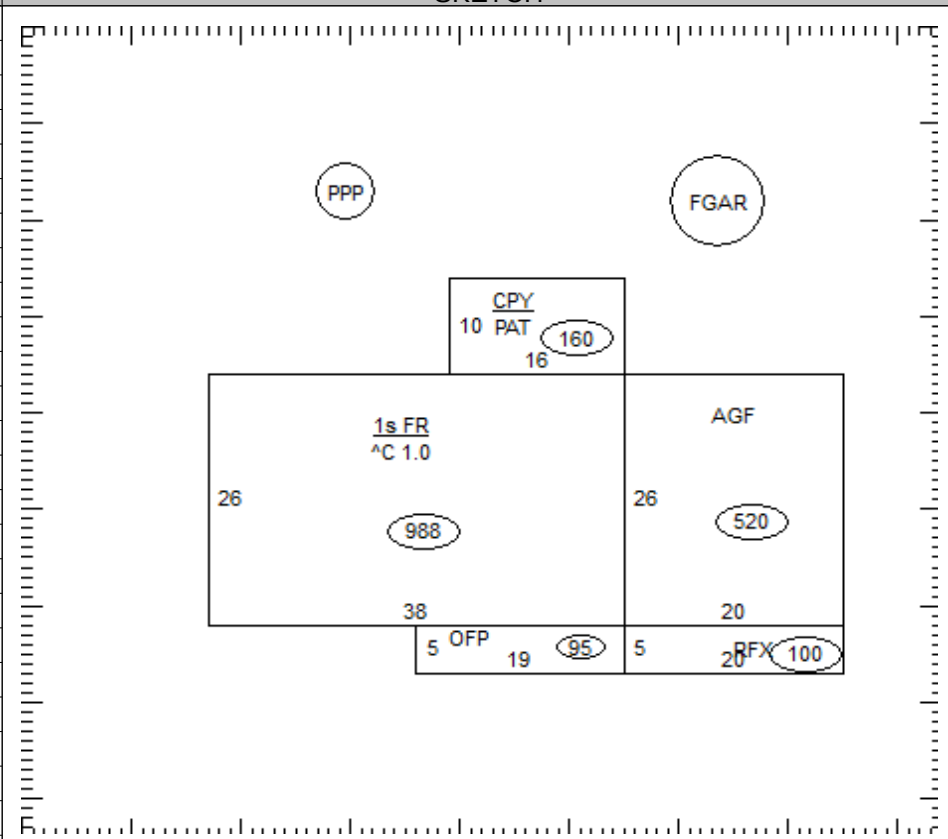

OCCUPANCY	ST.HT	SIZE	AREA	GRADE	PRICE	AGE	REMD	CND	UNADJ VAL	PHYS	PHYS VAL	FUNC	TRUE VAL
DWELLING	1	SK	988	C		1978		A	109,060	28	78,520		55,700
1 Gar - Frame		16x24	384	C	15.80	1980		A	6,070	67	2,000		2,000
2 Pool - PP		14x14	196	C		1990		A		47			0
3													
4													
5													
6													
7													
8													
9													
10													
11													
											TOTAL		57,700

08-032400.0000

COMMENTS

80 L/F STONE 4'
Dwelling has an Economic Factor of 71%

08-032400.0000

DUBLIN TWP-ROCKFORD CORP / PARKWAY SD
02-16-326-003

PROP. CLASS		
5	1	0

NEIGHBORHOOD	
000802-TM50	
M	09
B	
C	50

MILLISOR THOMAS JAMES
MILLISOR THOMAS JAMES
208 STATE ST
ROCKFORD, OH 45882

LEGAL INFORMATION
STREET ADDITION
ALSO 1/2 VACATED ST TO SOUTH
LOT#: 266

	OWNERSHIP	ADDRESS	CITY	STATE	ZIP	DATE	AMOUNT	DEED:CONV#	JS	VALID
1	OSBORN CRAIG L & LEIGH	302 N HOLLY ST	ROCKFORD	OH	45882	09/14/2009	44,000	WDC : 520	☐	■
2	ZIZELMAN CHARLES W &	208 STATE ST	ROCKFORD	OH	45882		0	: 0	☐	☐
3							0	0	☐	☐

X: Signature | ☐ TTO | LISTER: RK | DATE: 11/10/2004 | TIME: 12:20:51 PM | ■ LETTER | ☐ LETTER REC'D | GIS CODE

STREET/ROAD	TOPOGRAPHY	PU-UTILITIES-PR		NEIGHBORHOOD	INFLUENCE FACTORS	
■ PAVED	■ LEVEL	☐ WATER	☐	☐ IMPROVING	☐ A. NO ROAD	☐ F. RESTRICT
☐ GRAVEL	☐ HIGH	☐ SEWER	☐	■ STATIC	☐ B. TOPGRHY	☐ G. WOOD LT
☐ DIRT	☐ LOW	☐ GAS	☐	☐ DECLINING	☐ C. Ex Front	☐ H. VACANCY
☐ SIDEWALKS	☐ ROLLING	☐ ELECTRIC	☐	☐ OLD	☐ D. QUANTITY	☐ I. WATER FRONT
☐ CURBS	☐ STANDARD	■ STANDARD		☐ STANDARD	☐ E. SZ/SHAPE	☐ J. OTHER/CDU

PROPERTY LOCATION
208 STATE ST, ROCKFORD

COMMENT

LAND COMPUTATIONS

LAND TYPE	SIZE	M	RATE	C	INF	M	VALUE	C
					TOTAL		17,900	0

VALUATION SUMMARY

VALUE YEAR									
REASON FOR CHANGE									
APPRAISED VALUE	LAND								
	IMPR								
	TOTAL								
ASSESSED VALUE	LAND								
	IMPR								
	TOTAL								

OCCUPANCY	EXTERIOR
☐ SNGL FMLY	☐ WOOD
☐ DUPLEX	☐ STUCCO
☐ TRIPLEX	☐ ALM/VYNL
☐ CONVR	☐ CONC BLK
☐ MOBILE HM	☐ METAL
☐ BI/L TRI/L	☐ BRICK
☐ MOD/MAN	☐ STONE

ROOFING	ROOF TYPE
☐ METAL	☐ GABLE
☐ SLT/TLE	☐ HIP
☐ SHINGLES	☐ GAMBREL
☐ SHAKES	☐ MANSARD
☐ COMPOSITE	☐ FLAT

FLOORS	B	1	2	3	U
CONCRETE	☐	☐	☐	☐	☐
WOOD	☐	☐	☐	☐	☐
TILE/COMPO	☐	☐	☐	☐	☐
CARPET	☐	☐	☐	☐	☐

INT. FINISH	B	1	2	3	U
PLASTER/DW	☐	☐	☐	☐	☐
PANELING	☐	☐	☐	☐	☐
UNFINISHED	☐	☐	☐	☐	☐

ACCOMMODATIONS					
# OF ROOMS					
BEDROOMS					
FIREPLACES					

HEAT & AC	B	1	2	3	U
NO HEAT	☐	☐	☐	☐	☐
CTRL HEAT	☐	☐	☐	☐	☐
HW/STEAM	☐	☐	☐	☐	☐
ELECTRIC	☐	☐	☐	☐	☐
HEAT PUMP	☐	☐	☐	☐	☐
FLR/WALL	☐	☐	☐	☐	☐
STVE/SPCE	☐	☐	☐	☐	☐
GEOTHERMAL	☐	☐	☐	☐	☐
OUTSIDE	☐	☐	☐	☐	☐
CTRL A/C	☐	☐	☐	☐	☐

PLUMBING	BASE ☐				
X FULL BATH					
X HALF BATH					
X FIXTURES					

FLOOR	AREA	CONST	VALUE

SUBTOTAL			0
MULTI-FAMILY #	0		0
BSMT FINISH	0	S.F.	0
FIREPLACE #	0		0
HEATING	0	S.F.	0
AIR COND	0	S.F.	0
PLUMBING #	0		0
GARAGES & CARPORTS			0
EXTRA FEATURES			0
SUBTOTAL			0
GRADE FACTOR			%
UNADJUSTED VALUE			0
FACTOR			%

SKETCH

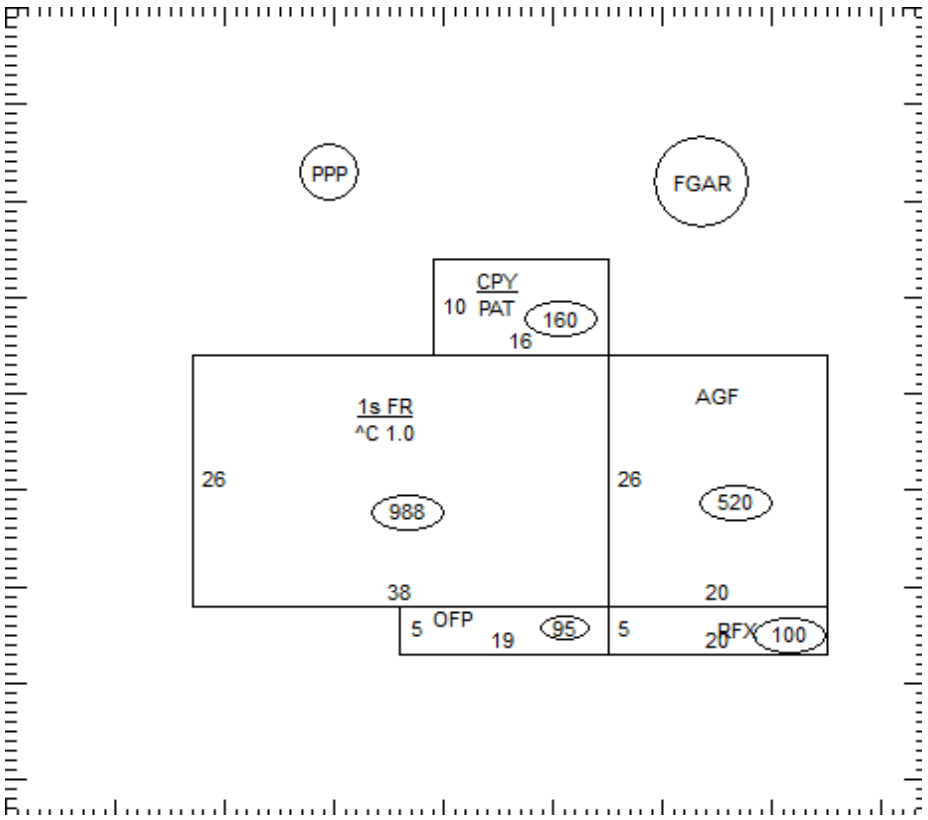

OCCUPANCY	ST.HT	SIZE	AREA	GRADE	PRICE	AGE	REMD	CND	UNADJ VAL	PHYS	PHYS VAL	FUNC	TRUE VAL
DWELLING		SK											
1													
2													
3													
4													
5													
6													
7													
8													
9													
10													
11													
												TOTAL	0

08-032400.0000

COMMENTS

80 L/F STONE 4'