06-009200.0000

NUDING HENRY D & KELLY A
NUDING HENRY D & KELLY A
5807 SITES RD
MENDON, OH 45862

CENTER TWP / CELINA SD

06-05-100-008

LEGAL INFORMATION
PT E 1/2 NW

RTS: 003-05-05
Acres:29.9400

QUALIFIED CREDITS: CAUV: 04094: 2015

PROP. CLASS		
1	1	1

NEIGHBORHOOD	
009061-A100	
M	04
B	
C	23

	OWNERSHIP	ADDRESS	CITY	STATE	ZIP	DATE	AMOUNT	DEED:CONV#	JS	VALID
1	NUDING HENRY D & KELLY A	5807 SITES RD	MENDON	OH	45862	12/21/2016	260,500	WDC : 907	☐	■
2	SNIDER GARY ETAL C/O BRENDA HICKS	PO BOX 2	MENDON	OH	45862	12/02/2016	0	QCE : X : 0	☐	☐
3	SNIDER GARY ETAL; SNIDER LYLE & ESTHER LIFE ESTATE	PO BOX 2	MENDON	OH	45862	10/16/2014	0	QCE : X : 0	☐	☐

X: ☐ TTO LISTER: JO DATE: 11/03/2004 TIME: 10:22:06 AM ■ LETTER ☐ LETTER REC'D GIS CODE

STREET/ROAD	TOPOGRAPHY	PU-UTILITIES-PR	NEIGHBORHOOD	INFLUENCE FACTORS	
■ PAVED	■ LEVEL	☐ WATER ☐	☐ IMPROVING	☐ A. NO ROAD	☐ F. RESTRICT
☐ GRAVEL	☐ HIGH	☐ SEWER ☐	☐ STATIC	☐ B. TOPGRHY	☐ G. WOOD LT
☐ DIRT	☐ LOW	☐ GAS ☐	☐ DECLINING	☐ C. Ex Front	☐ H. VACANCY
☐ SIDEWALKS	☐ ROLLING	☐ ELECTRIC ☐	☐ OLD	☐ D. QUANTITY	☐ I. WATER FRONT
☐ CURBS	☐ STANDARD	■ STANDARD	☐ STANDARD	☐ E. SZ/SHAPE	☐ J. OTHER/CDU

PROPERTY LOCATION
6671 US RT 33 , MENDON

COMMENT
TY2018:Net Gen=$2,145.32, Other Assessment=$8.98
DE17 DESKTOP RVW CHGS: COR STRY HGT
DE16 RMV BSMNT FROM 1.5 STRY/PER OWNER
DE14 OWNERS SNIDER GARY, HICKS BRENDA & SNIDER CARAL EACH 1/3
DE17 RMV OWN OCC/DIDN'T RET APP

LAND COMPUTATIONS

LAND TYPE	SIZE	M RATE C	INF	M VALUE C
CR:Crop Land TOTAL	**A 25.5000**	**8,375 1,821**		**222,930 57,790**
0029	A 2.2000	9,250 2,155		20,350 4,740
0069	A 3.6900	8,790 2,280		32,440 8,410
0070	A 7.4000	8,450 1,955		62,530 14,470
0078	A 1.9000	7,310 800		13,890 1,520
0079	A 1.6000	6,970 545		11,150 870
0087	A 8.7100	9,480 3,190		82,570 27,780
HS:Home Site:0601	A 1.0000	16,500 16,500		16,500 16,500
RD:Road:0900	A 1.6900	0 0		0 0
Total Acres: 29.9400			TOTAL	243,010 74,560

VALUATION SUMMARY

VALUE YEAR		2017	2017	2017	2017	2016	2016	2014	2014
REASON FOR CHANGE		CAUV	RAPP	CAUV	MISC	CAUV	MISC	CAUV	RAPP
APPRAISED VALUE	LAND	74,560	243,010	95,270	223,430	95,270	223,430	95,270	223,430
	IMPR	65,700	65,700	60,200	60,200	56,300	56,300	60,200	60,200
	TOTAL	140,260	308,710	155,470	283,630	151,570	279,730	155,470	283,630
ASSESSED VALUE	LAND	26,100	85,050	33,340	78,200	33,340	78,200	33,340	78,200
	IMPR	23,000	23,000	21,070	21,070	19,710	19,710	21,070	21,070
	TOTAL	49,100	108,050	54,410	99,270	53,050	97,910	54,410	99,270
CAUV TAX SAVINGS		2018=2575.70, 2017=2576.14, 2016=1916.88: Total=7068.72							

OCCUPANCY	EXTERIOR
■ SNGL FMLY	☐ WOOD
☐ DUPLEX	☐ STUCCO
☐ TRIPLEX	■ ALM/VYNL
☐ CONVR	☐ CONC BLK
☐ MOBILE HM	☐ METAL
☐ BI/L TRI/L	☐ BRICK
☐ MOD/MAN	☐ STONE

ROOFING	ROOF TYPE
☐ METAL	■ GABLE
☐ SLT/TLE	☐ HIP
■ SHINGLES	☐ GAMBREL
☐ SHAKES	☐ MANSARD
☐ COMPOSITE	☐ FLAT

FLOORS	B	1	2	3	U
CONCRETE	■	☐	☐	☐	☐
WOOD	☐	■	■	☐	☐
TILE/COMPO	☐	☐	☐	☐	☐
CARPET	☐	☐	☐	☐	☐

INT. FINISH	B	1	2	3	U
PLASTER/DW	☐	■	■	☐	☐
PANELING	☐	☐	☐	☐	☐
UNFINISHED	☐	☐	☐	☐	☐

ACCOMMODATIONS					
# OF ROOMS		4	2		
BEDROOMS		1	2		
FIREPLACES					

HEAT & AC	B	1	2	3	U
NO HEAT	☐	☐	☐	☐	☐
CTRL HEAT	■	■	■	☐	☐
HW/STEAM	☐	☐	☐	☐	☐
ELECTRIC	☐	☐	☐	☐	☐
HEAT PUMP	☐	☐	☐	☐	☐
FLR/WALL	☐	☐	☐	☐	☐
STVE/SPCE	☐	☐	☐	☐	☐
GEOTHERMAL	☐	☐	☐	☐	☐
OUTSIDE	☐	☐	☐	☐	☐
CTRL A/C	☐	■	☐	☐	☐

PLUMBING					BASE ■
X FULL BATH					
X HALF BATH					
X FIXTURES					

FLOOR	AREA	CONST	VALUE
1	864	FR	89,000
2ND	480	FR	23,740
+	0	FR	2,370
BSMT	384		4,990

SUBTOTAL			120,100
MULTI-FAMILY #	0		0
BSMT FINISH	0	S.F.	0
FIREPLACE #	0		0
HEATING	0	S.F.	0
AIR COND	864	S.F.	1,300
PLUMBING #	0		0
GARAGES & CARPORTS			0
EXTRA FEATURES			7,700
SUBTOTAL			129,100
GRADE FACTOR			100 %
UNADJUSTED VALUE			129,100
FACTOR			100 %

SKETCH

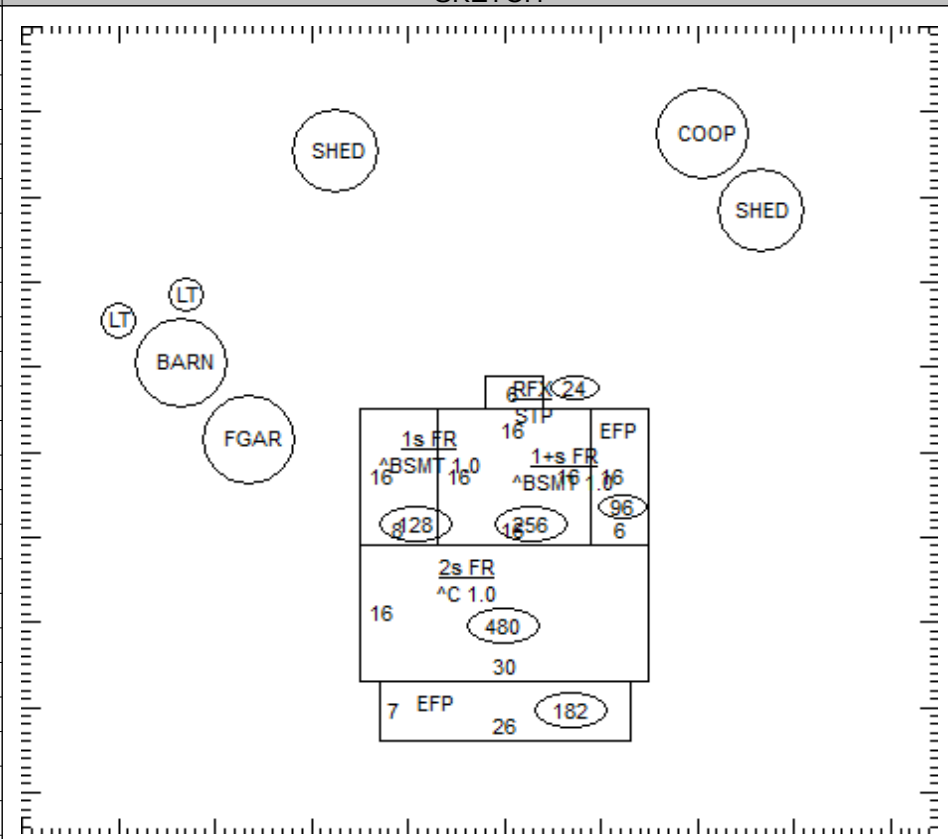

OCCUPANCY	ST.HT	SIZE	AREA	GRADE	PRICE	AGE	REMD	CND	UNADJ VAL	PHYS	PHYS VAL	FUNC	TRUE VAL
DWELLING	2	SK	1,344	C		1900		A	129,100	45	71,010		63,900
1 Coop		10x26	260	C	200.00	1950		A	200	90	20	DFLT50	0
2 Shed	PP	10x10	100	C				A		95			0
3 Lean - To	8	15x40	600	D	2.56	1900		A	1,540	95	80		100
4 Shed	PP	6x8	48	C				A		95			0
5 Barn	14	22x40	880	C	8.00	1900		A	7,040	95	350	DFLT50	200
6 Gar - Frame		42x27	1,134	D	12.64	1950		A	14,330	90	1,430		1,400
7 Lean - To	8	20x22	440	D	2.56	1900		A	1,130	95	60		100
8													
9													
10													
11													
												TOTAL	65,700

06-009200.0000

COMMENTS

Dwelling has an Economic Factor of 90%

06-009200.0000

NUDING HENRY D & KELLY A
NUDING HENRY D & KELLY A
5807 SITES RD
MENDON, OH 45862

CENTER TWP / CELINA SD

LEGAL INFORMATION
PT E 1/2 NW

RTS: 003-05-05
Acres:29.9400

06-05-100-008

QUALIFIED CREDITS: CAUV: 04094: 2015

PROP. CLASS		
1	1	1

NEIGHBORHOOD	
009061-A100	
M	04
B	
C	23

	OWNERSHIP	ADDRESS	CITY	STATE	ZIP	DATE	AMOUNT	DEED:CONV#	JS	VALID
1	SNIDER GARY L ETAL SNIDER	6671 US RT 33	MENDON	OH	45862	04/01/2003	0	: X : 0	☐	☐
2							0	0	☐	☐
3							0	0	☐	☐

X: ☐ TTO LISTER: JO DATE: 11/03/2004 TIME: 10:22:06 AM ■ LETTER ☐ LETTER REC'D GIS CODE

STREET/ROAD	TOPOGRAPHY	PU-UTILITIES-PR		NEIGHBORHOOD	INFLUENCE FACTORS	
■ PAVED	■ LEVEL	☐ WATER	☐	☐ IMPROVING	☐ A. NO ROAD	☐ F. RESTRICT
☐ GRAVEL	☐ HIGH	☐ SEWER	☐	☐ STATIC	☐ B. TOPGRHY	☐ G. WOOD LT
☐ DIRT	☐ LOW	☐ GAS	☐	☐ DECLINING	☐ C. Ex Front	☐ H. VACANCY
☐ SIDEWALKS	☐ ROLLING	☐ ELECTRIC	☐	☐ OLD	☐ D. QUANTITY	☐ I. WATER FRONT
☐ CURBS	☐ STANDARD	■ STANDARD		☐ STANDARD	☐ E. SZ/SHAPE	☐ J. OTHER/CDU

PROPERTY LOCATION
6671 US RT 33 , MENDON

COMMENT

LAND COMPUTATIONS

LAND TYPE	SIZE	M	RATE	C	INF	M	VALUE	C
WO:Woods:0079	A 1.0000		3,500	230			3,500	230
WS:Waste:0990	A .7500		100	50			80	40
Total Acres: 29.9400					TOTAL		243,010	74,560

VALUATION SUMMARY

VALUE YEAR		2011	2011						
REASON FOR CHANGE		CAUV	RAPP						
APPRAISED VALUE	LAND	48,220	159,680						
	IMPR	59,500	59,500						
	TOTAL	107,720	219,180						
ASSESSED VALUE	LAND	16,880	55,890						
	IMPR	20,830	20,830						
	TOTAL	37,710	76,720						
CAUV TAX SAVINGS		2018=2575.70, 2017=2576.14, 2016=1916.88: Total=7068.72							

OCCUPANCY	EXTERIOR
☐ SNGL FMLY	☐ WOOD
☐ DUPLEX	☐ STUCCO
☐ TRIPLEX	☐ ALM/VYNL
☐ CONVR	☐ CONC BLK
☐ MOBILE HM	☐ METAL
☐ BI/L TRI/L	☐ BRICK
☐ MOD/MAN	☐ STONE

ROOFING	ROOF TYPE
☐ METAL	☐ GABLE
☐ SLT/TLE	☐ HIP
☐ SHINGLES	☐ GAMBREL
☐ SHAKES	☐ MANSARD
☐ COMPOSITE	☐ FLAT

FLOORS	B	1	2	3	U
CONCRETE	☐	☐	☐	☐	☐
WOOD	☐	☐	☐	☐	☐
TILE/COMPO	☐	☐	☐	☐	☐
CARPET	☐	☐	☐	☐	☐

INT. FINISH	B	1	2	3	U
PLASTER/DW	☐	☐	☐	☐	☐
PANELING	☐	☐	☐	☐	☐
UNFINISHED	☐	☐	☐	☐	☐

ACCOMMODATIONS					
# OF ROOMS					
BEDROOMS					
FIREPLACES					

HEAT & AC	B	1	2	3	U
NO HEAT	☐	☐	☐	☐	☐
CTRL HEAT	☐	☐	☐	☐	☐
HW/STEAM	☐	☐	☐	☐	☐
ELECTRIC	☐	☐	☐	☐	☐
HEAT PUMP	☐	☐	☐	☐	☐
FLR/WALL	☐	☐	☐	☐	☐
STVE/SPCE	☐	☐	☐	☐	☐
GEOTHERMAL	☐	☐	☐	☐	☐
OUTSIDE	☐	☐	☐	☐	☐
CTRL A/C	☐	☐	☐	☐	☐

PLUMBING					BASE ☐
X FULL BATH					
X HALF BATH					
X FIXTURES					

FLOOR	AREA	CONST	VALUE
SUBTOTAL			0

MULTI-FAMILY #	0	0
BSMT FINISH	0 S.F.	0
FIREPLACE #	0	0
HEATING	0 S.F.	0
AIR COND	0 S.F.	0
PLUMBING #	0	0
GARAGES & CARPORTS		0
EXTRA FEATURES		0
SUBTOTAL		0
GRADE FACTOR		%
UNADJUSTED VALUE		0
FACTOR		%

SKETCH

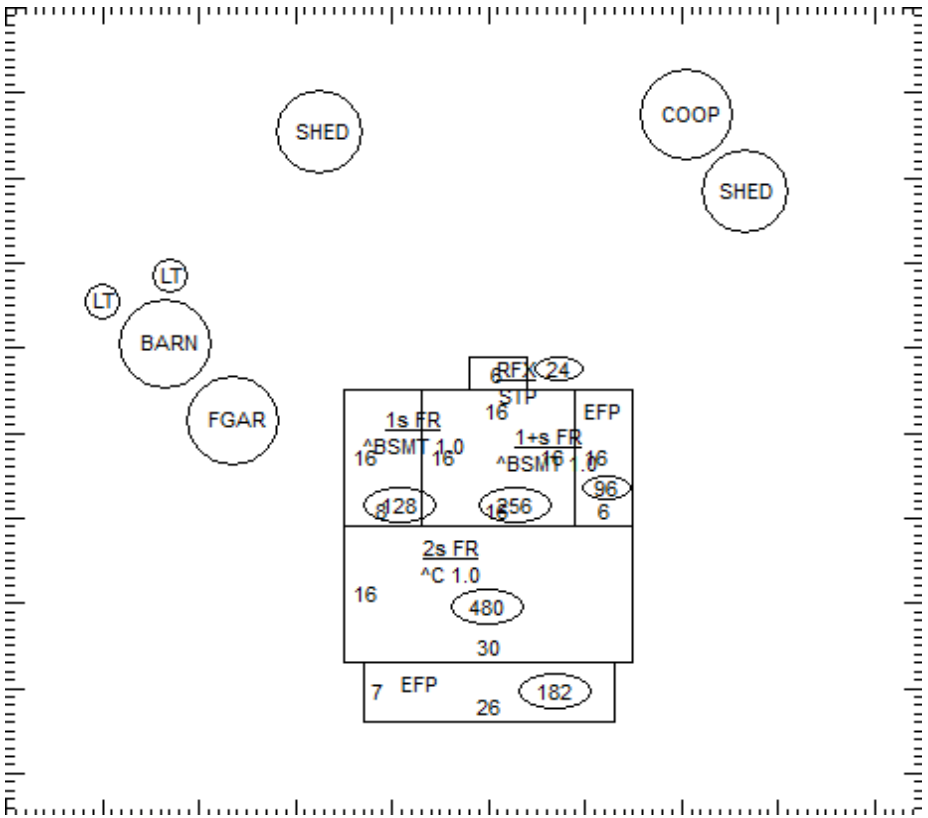

OCCUPANCY	ST.HT	SIZE	AREA	GRADE	PRICE	AGE	REMD	CND	UNADJ VAL	PHYS	PHYS VAL	FUNC	TRUE VAL
DWELLING		SK											
1													
2													
3													
4													
5													
6													
7													
8													
9													
10													
11													
												TOTAL	0

06-009200.0000

COMMENTS