05-053500.0000

FLECK JEROME M & NANCY M

FLECK JEROME M & NANCY M
320 E MAIN ST
COLDWATER, OH 45828

BUTLER TWP-COLDWATER CORP / COLDWATER SD
08-27-356-014

LEGAL INFORMATION
FOX & BOLMAN ADD

LOT#: 164

PROP. CLASS		
5	1	0

NEIGHBORHOOD	
000502-TM50	
M	14A7B
B	
C	49

	OWNERSHIP	ADDRESS	CITY	STATE	ZIP	DATE	AMOUNT	DEED:CONV#	JS	VALID
1	FLECK JEROME M & NANCY M	320 E MAIN ST	COLDWATER	OH	45828	02/29/2016	89,900	WDC : 109	☐	■
2	WENNING JEREMY P	402 WOODWARD ST	SAINT MARYS	OH	45885	05/30/2012	0	QCE : X : 0	☐	☐
3	WENNING JEREMY P & KERRI	320 MAIN ST	COLDWATER	OH	45828	03/31/1999	77,500	: A : 0	☐	■

X: ☐ TTO LISTER: DA DATE: 03/17/2005 TIME: 12:00:00 AM ☐ LETTER ☐ LETTER REC'D GIS CODE

STREET/ROAD	TOPOGRAPHY	PU-UTILITIES-PR	NEIGHBORHOOD	INFLUENCE FACTORS	
■ PAVED	☐ LEVEL	☐ WATER ☐	☐ IMPROVING	☐ A. NO ROAD	☐ F. RESTRICT
☐ GRAVEL	■ HIGH	☐ SEWER ☐	■ STATIC	☐ B. TOPGRHY	☐ G. WOOD LT
☐ DIRT	☐ LOW	☐ GAS ☐	☐ DECLINING	☐ C. Ex Front	☐ H. VACANCY
☐ SIDEWALKS	☐ ROLLING	☐ ELECTRIC ☐	☐ OLD	☐ D. QUANTITY	☐ I. WATER FRONT
☐ CURBS	☐ STANDARD	■ STANDARD	☐ STANDARD	☐ E. SZ/SHAPE	☐ J. OTHER/CDU

PROPERTY LOCATION
320 E MAIN ST, COLDWATER

COMMENT
TY2018:Net Gen=$1,060.64, Other Assessment=$0.00
DE17 RMV OWN OCC/DIDN'T RET APP

LAND COMPUTATIONS

LAND TYPE	SIZE	M RATE C	INF	M VALUE C
F:Front	F52 D132	ST200 DP94 ADJ188		9,800 0
			TOTAL	9,800 0

VALUATION SUMMARY

VALUE YEAR		2017	2016	2014	2011				
REASON FOR CHANGE		RAPP	MISC	RAPP	RAPP				
APPRAISED VALUE	LAND	9,800	9,500	9,500	9,800				
	IMPR	72,200	60,000	59,800	61,600				
	TOTAL	82,000	69,500	69,300	71,400				
ASSESSED VALUE	LAND	3,430	3,330	3,330	3,430				
	IMPR	25,270	21,000	20,930	21,560				
	TOTAL	28,700	24,330	24,260	24,990				

OCCUPANCY	EXTERIOR
■ SNGL FMLY	■ WOOD
☐ DUPLEX	☐ STUCCO
☐ TRIPLEX	☐ ALM/VYNL
☐ CONVR	☐ CONC BLK
☐ MOBILE HM	☐ METAL
☐ BI/L TRI/L	☐ BRICK
☐ MOD/MAN	☐ STONE

ROOFING	ROOF TYPE
☐ METAL	■ GABLE
☐ SLT/TLE	☐ HIP
■ SHINGLES	☐ GAMBREL
☐ SHAKES	☐ MANSARD
☐ COMPOSITE	☐ FLAT

FLOORS	B	1	2	3	U
CONCRETE	■	☐	☐	☐	☐
WOOD	☐	■	☐	☐	☐
TILE/COMPO	☐	☐	☐	☐	☐
CARPET	☐	☐	☐	☐	☐

INT. FINISH	B	1	2	3	U
PLASTER/DW	☐	■	☐	☐	☐
PANELING	☐	☐	☐	☐	☐
UNFINISHED	■	☐	☐	☐	☐

ACCOMMODATIONS					
# OF ROOMS	1	5			
BEDROOMS		2			
FIREPLACES					

HEAT & AC	B	1	2	3	U
NO HEAT	☐	☐	☐	☐	☐
CTRL HEAT	☐	■	☐	☐	☐
HW/STEAM	☐	☐	☐	☐	☐
ELECTRIC	☐	☐	☐	☐	☐
HEAT PUMP	☐	☐	☐	☐	☐
FLR/WALL	☐	☐	☐	☐	☐
STVE/SPCE	☐	☐	☐	☐	☐
GEOTHERMAL	☐	☐	☐	☐	☐
OUTSIDE	☐	☐	☐	☐	☐
CTRL A/C	☐	■	☐	☐	☐

PLUMBING					BASE ■
X FULL BATH		1			
X HALF BATH					
X FIXTURES					

FLOOR	AREA	CONST	VALUE
1	1176	FR	102,830
BSMT	721		9,370
SUBTOTAL			112,200
MULTI-FAMILY #	0		0
BSMT FINISH	0	S.F.	0
FIREPLACE #	0		0
HEATING	0	S.F.	0
AIR COND	1,176	S.F.	1,760
PLUMBING #	3		3,300
GARAGES & CARPORTS			0
EXTRA FEATURES			9,600
SUBTOTAL			126,860
GRADE FACTOR			100 %
UNADJUSTED VALUE			126,860
FACTOR			100 %

SKETCH

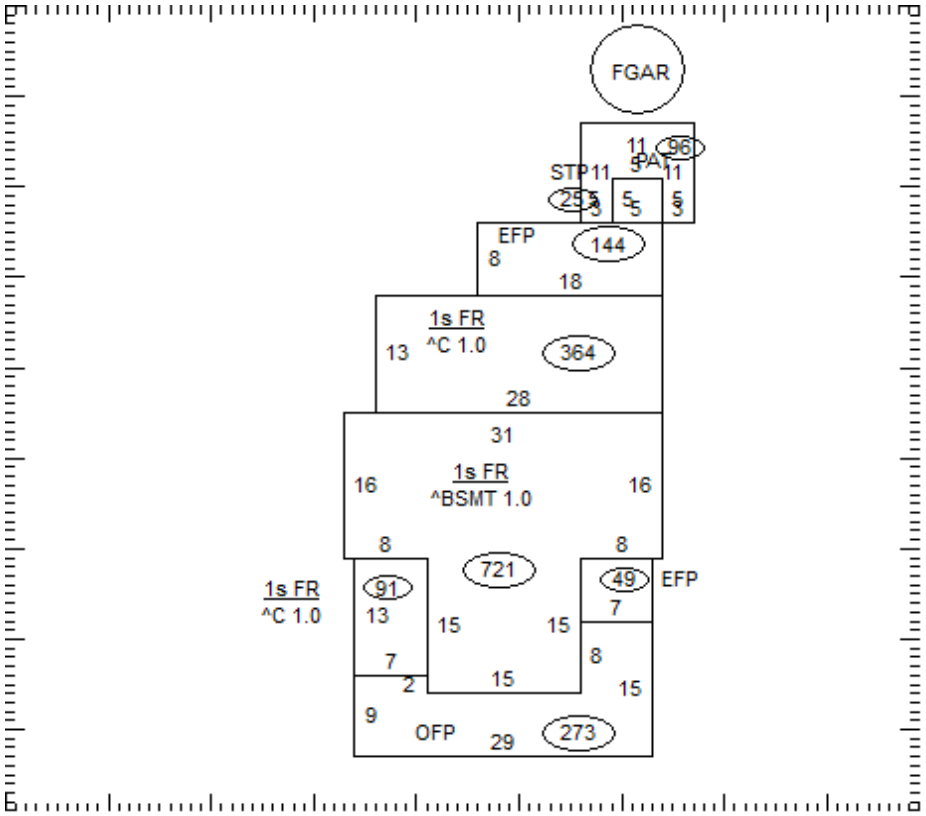

OCCUPANCY	ST.HT	SIZE	AREA	GRADE	PRICE	AGE	REMD	CND	UNADJ VAL	PHYS	PHYS VAL	FUNC	TRUE VAL
DWELLING	1	SK	1,176	C		1900		A	126,860	45	69,770		69,800
1 Gar - Frame	8	28x24	672	C	15.80	1973		A	10,620	77	2,440		2,400
2													
3													
4													
5													
6													
7													
8													
9													
10													
11													
											TOTAL		72,200

05-053500.0000

COMMENTS

Dwelling has an Economic Factor of 100%