05-012551.0149

RRMC
RRMC
4356 BUSCHOR RD
COLDWATER, OH 45828
Created in 2016 From 05-012551.0000 due to Split

BUTLER TWP-COLDWATER CORP / COLDWATER SD
08-28-251-073

LEGAL INFORMATION
WENNING ACRES
SIXTH ADDITION
LOT#: 1730

PROP. CLASS		
5	3	0

NEIGHBORHOOD	
000511-TS60	
M	
B	
C	

	OWNERSHIP	ADDRESS	CITY	STATE	ZIP	DATE	AMOUNT	DEED:CONV#	JS	VALID
1	RRMC	4356 BUSCHOR RD	COLDWATER	OH	45828	05/09/2017	59,300	WDC : 291	☐	■
2	WENNING ACRES INC	706 N SECOND ST	COLDWATER	OH	45828	09/30/2016	0	QCE : X : 0	☐	☐
3							0	0	☐	☐

X: ☐ TTO LISTER: JK DATE: 03/26/2018 TIME: 12:00:00 AM ☐ LETTER ☐ LETTER REC'D GIS CODE

STREET/ROAD	TOPOGRAPHY	PU-UTILITIES-PR	NEIGHBORHOOD	INFLUENCE FACTORS	
☐ PAVED	☐ LEVEL	☐ WATER ☐	☐ IMPROVING	☐ A. NO ROAD	☐ F. RESTRICT
☐ GRAVEL	☐ HIGH	☐ SEWER ☐	☐ STATIC	☐ B. TOPGRHY	☐ G. WOOD LT
☐ DIRT	☐ LOW	☐ GAS ☐	☐ DECLINING	☐ C. Ex Front	☐ H. VACANCY
☐ SIDEWALKS	☐ ROLLING	☐ ELECTRIC ☐	☐ OLD	☐ D. QUANTITY	☐ I. WATER FRONT
☐ CURBS	☐ STANDARD	☐ STANDARD	☐ STANDARD	☐ E. SZ/SHAPE	☐ J. OTHER/CDU

PROPERTY LOCATION
451 ROBERT ST,

COMMENT
TY2018:Net Gen=$3,940.28, Other Assessment=$0.00
DE18 TT TENANTS; ADD TRI
451, 453 & 455 ROBERT ST
TriDwell=85

LAND COMPUTATIONS

LAND TYPE	SIZE	M RATE C	INF	M VALUE C
F:Front	F140 D141	ST335 DP96 ADJ322		45,100 0
			TOTAL	45,100 0

VALUATION SUMMARY

VALUE YEAR		2018	2017	2017	2017	2016			
REASON FOR CHANGE		NC	RAPP	MISC	MISC	MISC			
APPRAISED VALUE	LAND	45,100	45,100	37,700	19,800	0			
	IMPR	305,400	0	0	0	0			
	TOTAL	350,500	45,100	37,700	19,800	0			
ASSESSED VALUE	LAND	15,790	15,790	13,200	6,930	0			
	IMPR	106,890	0	0	0	0			
	TOTAL	122,680	15,790	13,200	6,930	0			

OCCUPANCY	EXTERIOR
☐ SNGL FMLY	☐ WOOD
☐ DUPLEX	☐ STUCCO
■ TRIPLEX	■ ALM/VYNL
☐ CONVR	☐ CONC BLK
☐ MOBILE HM	☐ METAL
☐ BI/L TRI/L	■ BRICK
☐ MOD/MAN	☐ STONE

ROOFING	ROOF TYPE
☐ METAL	■ GABLE
☐ SLT/TLE	☐ HIP
■ SHINGLES	☐ GAMBREL
☐ SHAKES	☐ MANSARD
☐ COMPOSITE	☐ FLAT

FLOORS	B	1	2	3	U
CONCRETE	☐	☐	☐	☐	☐
WOOD	☐	☐	☐	☐	☐
TILE/COMPO	☐	■	☐	☐	☐
CARPET	☐	■	☐	☐	☐

INT. FINISH	B	1	2	3	U
PLASTER/DW	☐	■	☐	☐	☐
PANELING	☐	☐	☐	☐	☐
UNFINISHED	☐	☐	☐	☐	☐

ACCOMMODATIONS					
# OF ROOMS		15			
BEDROOMS		6			
FIREPLACES					

HEAT & AC	B	1	2	3	U
NO HEAT	☐	☐	☐	☐	☐
CTRL HEAT	☐	■	☐	☐	☐
HW/STEAM	☐	☐	☐	☐	☐
ELECTRIC	☐	☐	☐	☐	☐
HEAT PUMP	☐	☐	☐	☐	☐
FLR/WALL	☐	☐	☐	☐	☐
STVE/SPCE	☐	☐	☐	☐	☐
GEOTHERMAL	☐	☐	☐	☐	☐
OUTSIDE	☐	☐	☐	☐	☐
CTRL A/C	☐	■	☐	☐	☐

PLUMBING	BASE ■			
X FULL BATH		2		
X HALF BATH		3		
X FIXTURES				

FLOOR	AREA	CONST	VALUE
1	4112	FR	243,470

SUBTOTAL			243,470
MULTI-FAMILY #	2		5,000
BSMT FINISH	0	S.F.	0
FIREPLACE #	0		0
HEATING	0	S.F.	0
AIR COND	4,112	S.F.	6,170
PLUMBING #	12		13,200
GARAGES & CARPORTS			18,600
EXTRA FEATURES			7,300
SUBTOTAL			293,740
GRADE FACTOR			105 %
UNADJUSTED VALUE			262,160
FACTOR			100 %

SKETCH

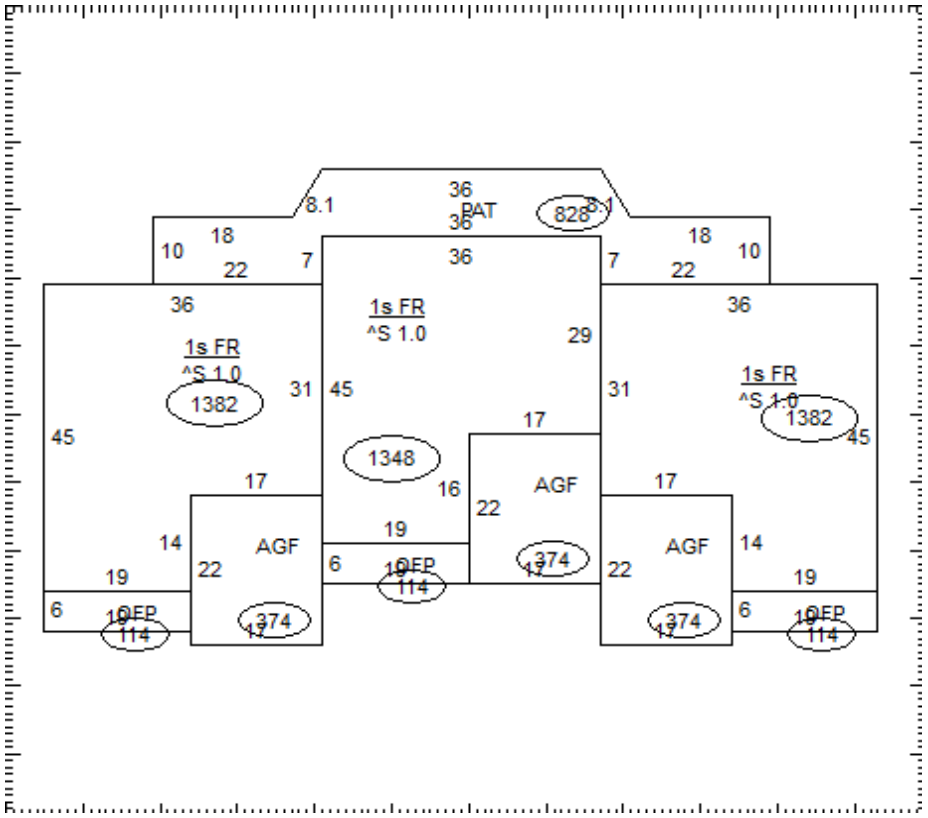

OCCUPANCY	ST.HT	SIZE	AREA	GRADE	PRICE	AGE	REMD	CND	UNADJ VAL	PHYS	PHYS VAL	FUNC	TRUE VAL
DWELLING	1	SK	4,112	C+		2017		G	262,160	1	259,540		259,500
1													
2													
3													
4													
5													
6													
7													
8													
9													
10													
11													
											TOTAL		259,500

05-012551.0149

COMMENTS

Dwelling has an Economic Factor of 100%