07-058600.0000

DUBLIN TWP
PARKWAY SD
02-29-400-003

LEGAL INFORMATION

NE COR SE

NEIGH-GROUP: CRUR50-50
Acres:5.0000

M	
B	
C	

RTS: 002-04-29

FINANCING VI HEALTHCARE PROPERTY LLC
FINANCING VI HEALTHCARE PROPERTY LLC
303 W MADISON ST APT/SUITE 2400
CHICAGO, IL 60603

COMMENT
TY2016:Net Gen=$20,820.14, Other Assessment=$2.00
DE17 DESKTOP RVW CHGS: GARG'S, PVING, FNCING INCL W/BLDG VAL. COR UNITS/SPOKE W/PEYTON
DE06 clerr corr/rmm'd 10% inc fnc/compl 2006

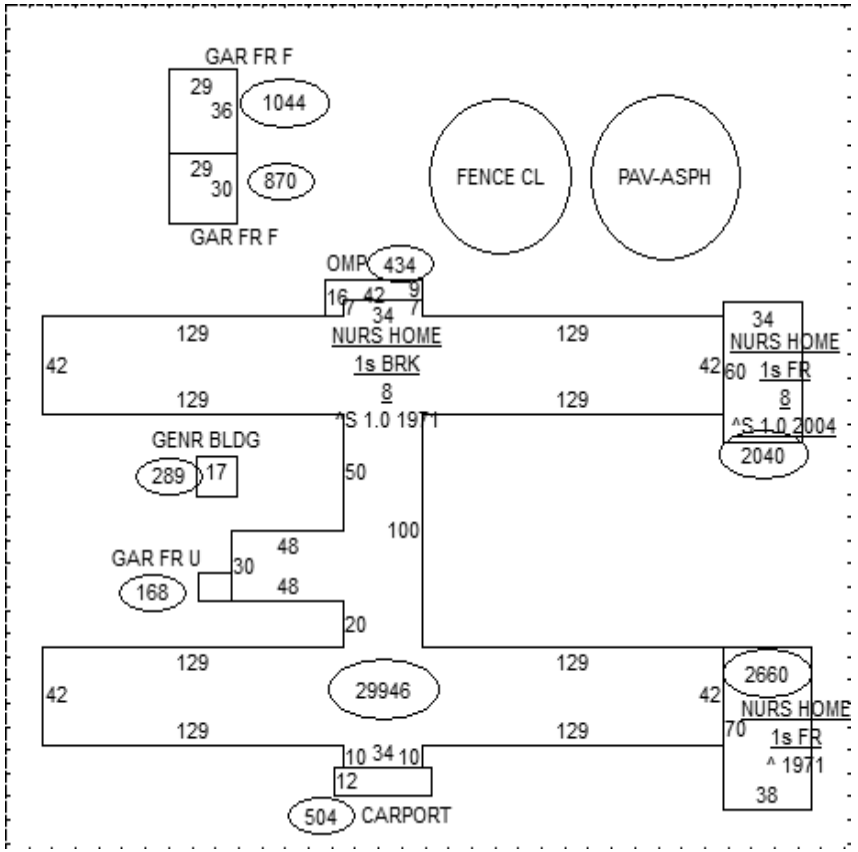

Sales Data						Date
Date	Amount	Deed:Conv#	Use	Valid	Lister: DL	04/07/17
01/02/2015	3,800,000	2:WDC : 2	412	■	Pricer:	
01/20/2006	1,080,000	WDC : A-M : 53	412	☐	Reviewer:	
06/01/2000	5,182,500	: A-M : 0	412	☐	Final:	
				☐	Call Back:	
				☐	Visit:	

VALUATION SUMMARY					
VALUE YEAR		2017	2017	2014	2011
REASON FOR CHANGE		RAPP	MISC	RAPP	RAPP
ESTIMATED MARKET VALUE	LAND	33,150	33,150	33,150	33,150
	IMPR	1,063,260	964,240	1,007,080	1,007,080
	TOTAL	1,096,410	997,390	1,040,230	1,040,230
ASSESSED VALUE	LAND	11,600	11,600	11,600	11,600
	IMPR	372,140	337,480	352,480	352,480
	TOTAL	383,740	349,080	364,080	364,080

STREET/ROAD	TOPOGRAPHY	PU-UTILITIES-PR	ZONING
☐ PAVED	☐ LEVEL	☐ WATER ■	☐ AG-RES
☐ GRAVEL	☐ HIGH	☐ SEWER ■	■ COMMERCIAL
☐ DIRT	☐ LOW	☐ GAS ☐	☐ INDUSTRIAL
☐ SIDEWALKS	☐ ROLLING	■ ELECTRIC ☐	
☐ CURBS	☐ STANDARD	☐ STANDARD	

INFLUENCE FACTORS		
A. NO ROAD	E. SZ/SHAPE	I. WATER FRONT
B. TOPGRHY	F. RESTRICT	J. OTHER/CDU
C. Ex Front	G. WOOD LT	
D. QUANTITY	H. VACANCY	

LAND TYPE	SIZE	M RATE C	INF	M VALUE C	
IL:ICE Land	A:5	13,000		33,150 0	
Totals:	Total Acres 5.0000			33,150 0	33,150

		EX WALL	A	ROOFING	A	WINDOW	A	DOORS	A	FOUNDATION	A	FRAMING	A
		STONE	☐	GABLE/HIP	☐	STORE FRT	☐	OVERHEAD		SLAB	■	PRE ENG	☐
CLASS/QUALITY RANK		BRICK	☐	SHED/FLAT	☐	CASEMENT	☐			CRAWL	☐	STEEL	☐
A) FP STRUCT. STEEL FRAME	1. BASIC	CON BLK	☐	CON DECK	☐	DBLH	☐			PILE/COL	☐	REINF CONC	☐
B) R.C. FRAME	2. FAIR	WD/MTL	☐	MTL DECK	☐	SLIDE BY	☐			REINFOR	☐	CB/MASON	☐
C) MASONRY BEARING WALLS	3. AVE	ENAM STL	☐	WD DECK	☐	**CANOPY**	A			STEEL	☐	FRAME	☐
D) WD OR STEEL FR EX. WALLS	4. GOOD	ALUM/VYL	☐	METAL	☐	LIGHTED	☐	STEEL INS	☐	BRICK	☐	POLE	☐
S) METAL M) MILL P) POLE	5. EXCEL	CON PANEL	☐	ASPH	☐	SOFFITS	☐	WOOD	☐	STONE	☐	TILT UP	☐
TOTAL AREA	**PERIMETER** 0	PLATE GLS	☐	RUBBER	☐	C S W	☐	MTL	☐	CON BLK	☐	SANDWICH	☐
# STORIES 1	**STORY HT** 8	STUCCO	☐	BUILT UP	☐	**FACADE**	A	GLASS	☐	FRAME	☐	STANDARD	■
AGE	**SPRINKLER**	INSULATED	☐	INSULATED	☐			STANDARD	☐	STANDARD	☐		

H.V.A.C.				FLOORS	B	1	2	3	U	PARTITIONS	B	1	2	3	U	INTERIOR FINISH	B	1	2	3	U
Electric	☐	Electric Wall	☐	CONCRETE	☐	☐	☐	☐	☐	MASONRY	☐	☐	☐	☐	☐	UNFINISHED	☐	☐	☐	☐	☐
Forced Air Unit	☐	Hot Water	☐	WOOD	☐	☐	☐	☐	☐	WD STUD	☐	☐	☐	☐	☐	FINISH OPEN	☐	☐	☐	☐	☐
Hot Water, Rad	☐	Space/ Wall Furnace	☐	TILE A Q V T	☐	☐	☐	☐	☐	MTL STUD	☐	☐	☐	☐	☐	FINISH DIV	☐	☐	☐	☐	☐
Steam	☐	Warm & Cld Air	☐	CARPET	☐	☐	☐	☐	☐	**CEILINGS**	**B**	**1**	**2**	**3**	**U**	PANEL	☐	☐	☐	☐	☐
Ventilation	☐	Heat Pump	☐	ASPHALT	☐	☐	☐	☐	☐	ACCUT/PANEL	☐	☐	☐	☐	☐	PLASTER / DW	☐	☐	☐	☐	☐
Package Unit	☐	Ind TW Heat Pump	☐	GRAVEL	☐	☐	☐	☐	☐	PLASTER/DW	☐	☐	☐	☐	☐	BLOCK	☐	☐	☐	☐	☐
Hot & Cld Water	☐	Evaporated Cool	☐	DIRT	☐	☐	☐	☐	☐	SUSP/OPEN	☐	☐	☐	☐	☐	GLAZED TILE	☐	☐	☐	☐	☐
Floor Furnace	☐	Co-Ray-Vac	☐	STANDARD	■					STANDARD	■					STANDARD	■				
Complete HVAC	☐	No Heat	☐																		
Refrig. Cooling	☐	Standard	■																		

PLUMBING	A		A	LIGHTING	A		A
NO PLUMBING	☐	EXTRA FIXTURES	9	FLUORESCENT	☐	METAL HALIDE	☐
2 FIXTURE BATH	26	STANDARD	☐	SODIUM VAP	☐	STANDARD	■
3 FIXTURE BATH	1			MERCURY VAP	☐		

YARD ITEMS

	ITEM	CONST	HT	SIZE X SIZE	AREA	UNITS	AGE	REM	COND	GRD	$/UNIT	UNADJUSTED $	PHY	FC	EC	MARKET VALUE
A	499.032:Garage: Detached Frame/Blo			30 X 29	870		1973	1990	A	N	.00	0	0	0	0	0
B	499.032:Garage: Detached Frame/Blo			36 X 29	1,044		1973	1990	A	N	.00	0	0	0	0	0
C	499.078:GENR BLDG			17 X 17	289		1991		A	N	.00	0	0	0	0	0
D	901.001:Paving: Asphalt				10,400		1971		A	N	.00	0	0	0	0	0
E	901.030:Fence: Chainlink Mtl or Vi					80	2003		A	N	.00	0	0	0	0	0

	ITEM	CONST	HT	SIZE X SIZE	AREA	UNITS	AGE	REM	CND	GRD	$/UNIT	UNADJUSTED $	PHY	FC	EC	MARKET VALUE
A	412.011:Nursing Homes <100 Beds		8		29,946	99	1971	2005A	A	F	11,000.00	1,089,000	0	0	0	1,089,000
1	901.023:Carport			12 X 42	504		1971		A	F	8.60	4,330	42	0	0	2,510
2	412.011:Nursing Homes <100 Beds		8	70 X 38	2,660		1971		A	N	.00	0	0	0	0	0
3	499.055:OMP				434		1971		A	A	13.00	5,640	37	0	0	3,550
4	412.011:Nursing Homes <100 Beds	C	8	60 X 34	2,040		2004		A	N	.00	0	0	0	0	0
5	499.029:GAR FR U			12 X 14	168		1973	1990A	A	A	12.30	2,070	35	0	0	1,350

AMENITY TOTAL	0
LESS LAND: 33,150	TOTAL IMPR 1,063,260

COMMENTS

TT MAINT. MAN DAVE SUNDERLAND