06-022000.0100

CENTER TWP / CELINA SD

06-13-100-004

PROP. CLASS		
1	1	1

NEIGHBORHOOD	
009061-A100	
M	10
B	
C	04

HOMAN GREGORY M & TANYA M
HOMAN GREGORY M & TANYA M
667 LOCK TWO RD
NEW BREMEN, OH 45869
Created in 2003 From 06-022000.0000 due to Split

LEGAL INFORMATION
PT W SIDE SW NW

RTS: 003-05-13
Acres:1.7220

QUALIFIED CREDITS: CAUV: 05870

	OWNERSHIP	ADDRESS	CITY	STATE	ZIP	DATE	AMOUNT	DEED:CONV#	JS	VALID
1	HOMAN GREGORY M & TANYA	667 LOCK TWO RD	NEW BREMEN	OH	45869	11/14/2016	1,045,200	2:WDC : 807	☐	■
2	RASAWEHR JEFFREY E	221 BALDWIN RD	BIRMINGHAM	MI	48009	02/28/2013	0	2:QCE : X : 0	☐	☐
3	RASAWEHR JEFFREY E &	8820 KUCK RD	CELINA	OH	45822	12/13/2000	135,000	: A : 0	☐	■

X:	LISTER:	DATE: 11/24/2015	TIME: 12:00:00 AM	☐ LETTER	☐ LETTER REC'D	GIS CODE Minor Sub

STREET/ROAD	TOPOGRAPHY	PU-UTILITIES-PR		NEIGHBORHOOD	INFLUENCE FACTORS	
■ PAVED	■ LEVEL	☐ WATER	☐	☐ IMPROVING	☐ A. NO ROAD	☐ F. RESTRICT
☐ GRAVEL	☐ HIGH	☐ SEWER	☐	☐ STATIC	☐ B. TOPGRHY	☐ G. WOOD LT
☐ DIRT	☐ LOW	☐ GAS	☐	☐ DECLINING	☐ C. Ex Front	☐ H. VACANCY
☐ SIDEWALKS	☐ ROLLING	☐ ELECTRIC	☐	☐ OLD	☐ D. QUANTITY	☐ I. WATER FRONT
☐ CURBS	☐ STANDARD	■ STANDARD		☐ STANDARD	☐ E. SZ/SHAPE	☐ J. OTHER/CDU

PROPERTY LOCATION
8820 KUCK RD, CELINA

COMMENT
TY2016:Net Gen=$2,823.18, Other Assessment=$6.12
DE15 RMV 20% USE ON DWLG/ NOT VACANT/ USED AS RENTAL
DE07 ADDED 7 GR BNS, POLE BLDG
DE08 HSE ADDTN/ TTO DE15 RMV GB VALUE PER ODT
DE17 DESKTOP RVW CHGS: COR OUTBLDGS

LAND COMPUTATIONS

LAND TYPE	SIZE	M RATE C	INF	M VALUE C
CR:Crop Land:0070	A .7220	8,450 1,955		6,100 1,410
HS:Home Site:0601	A 1.0000	16,500 16,500		16,500 16,500
Total Acres: 1.7220			TOTAL	22,600 17,910

VALUATION SUMMARY

VALUE YEAR		2017	2017	2017	2017	2016	2016	2015	2015
REASON FOR CHANGE		CAUV	RAPP	CAUV	MISC	CAUV	MISC	CAUV	RPER
APPRAISED VALUE	LAND	17,910	22,600	16,960	20,630	16,960	20,630	16,960	20,630
	IMPR	163,000	163,000	177,100	177,100	171,800	171,800	147,300	147,300
	TOTAL	180,910	185,600	194,060	197,730	188,760	192,430	164,260	167,930
ASSESSED VALUE	LAND	6,270	7,910	5,940	7,220	5,940	7,220	5,940	7,220
	IMPR	57,050	57,050	61,990	61,990	60,130	60,130	51,560	51,560
	TOTAL	63,320	64,960	67,930	69,210	66,070	67,350	57,500	58,780
CAUV TAX SAVINGS		2016=54.70, 2015=53.16, 2014=53.26: Total=161.12							

OCCUPANCY	EXTERIOR
■ SNGL FMLY	☐ WOOD
☐ DUPLEX	☐ STUCCO
☐ TRIPLEX	☐ ALM/VYNL
☐ CONVR	☐ CONC BLK
☐ MOBILE HM	☐ METAL
☐ BI/L TRI/L	■ BRICK
☐ MOD/MAN	☐ STONE

ROOFING	ROOF TYPE
☐ METAL	☐ GABLE
☐ SLT/TLE	■ HIP
■ SHINGLES	☐ GAMBREL
☐ SHAKES	☐ MANSARD
☐ COMPOSITE	☐ FLAT

FLOORS	B	1	2	3	U
CONCRETE	■	☐	☐	☐	☐
WOOD	☐	☐	☐	☐	☐
TILE/COMPO	☐	☐	■	☐	☐
CARPET	☐	☐	■	☐	☐

INT. FINISH	B	1	2	3	U
PLASTER/DW	☐	☐	■	☐	☐
PANELING	☐	☐	☐	☐	☐
UNFINISHED	■	☐	☐	☐	☐

ACCOMMODATIONS					
# OF ROOMS			6		
BEDROOMS			4		
FIREPLACES					

HEAT & AC	B	1	2	3	U
NO HEAT	☐	☐	☐	☐	☐
CTRL HEAT	☐	☐	■	☐	☐
HW/STEAM	☐	☐	☐	☐	☐
ELECTRIC	☐	☐	☐	☐	☐
HEAT PUMP	☐	☐	☐	☐	☐
FLR/WALL	☐	☐	☐	☐	☐
STVE/SPCE	☐	☐	☐	☐	☐
GEOTHERMAL	☐	☐	☐	☐	☐
OUTSIDE	☐	☐	☐	☐	☐
CTRL A/C	☐	☐	■	☐	☐

PLUMBING			BASE	■	
X FULL BATH			1		
X HALF BATH					
X FIXTURES					

FLOOR	AREA	CONST	VALUE
1	520	FR	35,000
1	1716	BRK	123,590
BSMT	1716		22,310

SUBTOTAL			180,900
MULTI-FAMILY #	0		0
BSMT FINISH	0	S.F.	0
FIREPLACE #	0		0
HEATING	0	S.F.	0
AIR COND	1,716	S.F.	2,570
PLUMBING #	3		3,300
GARAGES & CARPORTS			13,800
EXTRA FEATURES			3,400
SUBTOTAL			203,970
GRADE FACTOR			100 %
UNADJUSTED VALUE			203,970
FACTOR			100 %

SKETCH

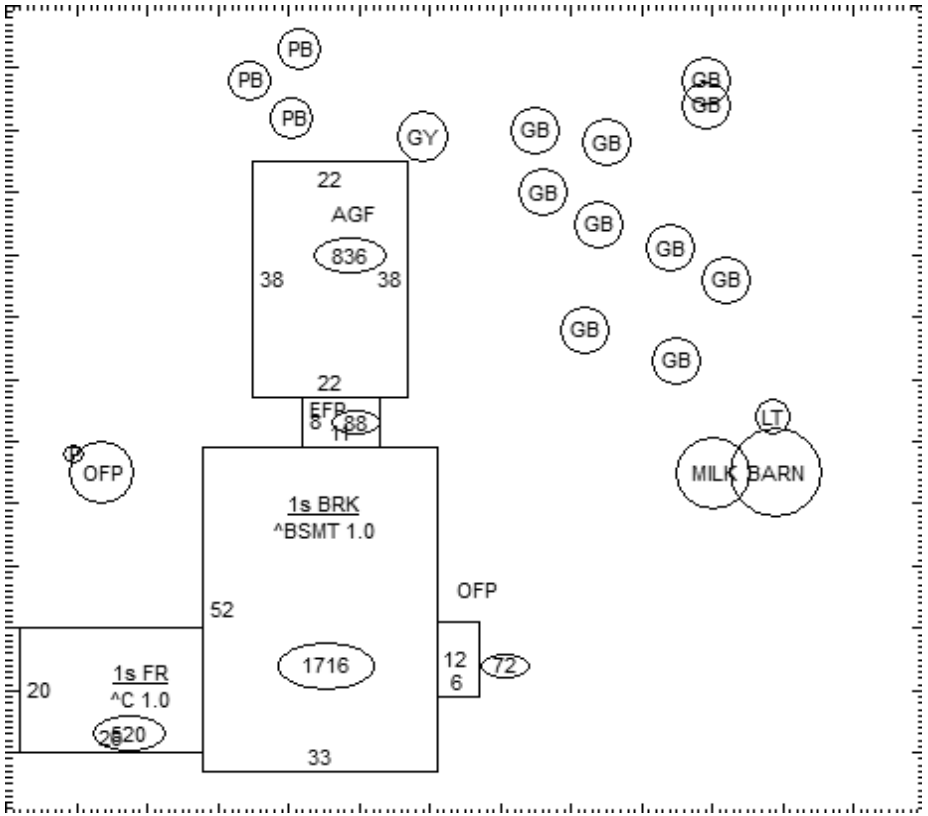

OCCUPANCY	ST.HT	SIZE	AREA	GRADE	PRICE	AGE	REMD	CND	UNADJ VAL	PHYS	PHYS VAL	FUNC	TRUE VAL
DWELLING	1	SK	2,236	C		1970		A	203,970	35	132,580		119,300
1 Milk House / Par		10x12	120	C	12.00	1947		A	1,440	90	140	DFLT50	100
2 Pole Bldg	16	46x80	3,680	D	6.08	2000		A	22,370	30	15,660		15,700
3 Lean - To	8	30x37	1,110	D	2.56	2000		A	2,840	30	1,990		2,000
4 Barn	16	40x56	2,240	D	6.40	1946		A	14,340	95	720	DFLT50	400
5 Pole Bldg	12	48x40	1,920	C	8.50	1973		A	16,320	77	3,750		3,800
6 Grain Bin	24	24x21	504	C		1980		A		67			0
7 Granary	12	24x30	720	C	7.00	1970		A	5,040	80	1,010	DFLT50	500
8 Pole Bldg	15	46x80	3,680	C	5.60	2006		A	20,610	17	17,110		17,100
9 Grain Bin	21	21x25	525	C		2006		A		17			0
10 Grain Bin	15	15x15	225	C		1970		F		80			0
11 Grain Bin	20	18x20	360	C		1975		F		78			0
												TOTAL	158,900

06-022000.0100

COMMENTS

>>OB Features: 1.8 <Open Two Sides>
Dwelling has an Economic Factor of 90%

06-022000.0100

CENTER TWP / CELINA SD

06-13-100-004

PROP. CLASS		
1	1	1

NEIGHBORHOOD	
009061-A100	
M	10
B	
C	04

HOMAN GREGORY M & TANYA M
HOMAN GREGORY M & TANYA M
667 LOCK TWO RD
NEW BREMEN, OH 45869
Created in 2003 From 06-022000.0000 due to Split

LEGAL INFORMATION
PT W SIDE SW NW

RTS: 003-05-13
Acres:1.7220

QUALIFIED CREDITS: CAUV: 05870

	OWNERSHIP	ADDRESS	CITY	STATE	ZIP	DATE	AMOUNT	DEED:CONV#	JS	VALID
1	HOMAN GREGORY M & TANYA	667 LOCK TWO RD	NEW BREMEN	OH	45869	11/14/2016	1,045,200	2:WDC : 807	☐	■
2	RASAWEHR JEFFREY E	221 BALDWIN RD	BIRMINGHAM	MI	48009	02/28/2013	0	2:QCE : X : 0	☐	☐
3	RASAWEHR JEFFREY E &	8820 KUCK RD	CELINA	OH	45822	12/13/2000	135,000	: A : 0	☐	■

X: | LISTER: | DATE: 11/24/2015 | TIME: 12:00:00 AM | ☐ LETTER | ☐ LETTER REC'D | GIS CODE Minor Sub

STREET/ROAD	TOPOGRAPHY	PU-UTILITIES-PR		NEIGHBORHOOD	INFLUENCE FACTORS	
■ PAVED	■ LEVEL	☐ WATER	☐	☐ IMPROVING	☐ A. NO ROAD	☐ F. RESTRICT
☐ GRAVEL	☐ HIGH	☐ SEWER	☐	☐ STATIC	☐ B. TOPGRHY	☐ G. WOOD LT
☐ DIRT	☐ LOW	☐ GAS	☐	☐ DECLINING	☐ C. Ex Front	☐ H. VACANCY
☐ SIDEWALKS	☐ ROLLING	☐ ELECTRIC	☐	☐ OLD	☐ D. QUANTITY	☐ I. WATER FRONT
☐ CURBS	☐ STANDARD	■ STANDARD		☐ STANDARD	☐ E. SZ/SHAPE	☐ J. OTHER/CDU

PROPERTY LOCATION
8820 KUCK RD, CELINA

COMMENT

LAND COMPUTATIONS

LAND TYPE	SIZE	M	RATE	C	INF	M	VALUE	C
Total Acres: 1.7220					TOTAL		22,600	17,910

VALUATION SUMMARY

VALUE YEAR		2014	2014	2013	2013	2011	2011		
REASON FOR CHANGE		CAUV	RAPP	CAUV	BOR	CAUV	RAPP		
APPRAISED VALUE	LAND	16,960	20,630	15,800	18,890	15,800	18,890		
	IMPR	174,400	174,400	168,900	168,900	193,000	193,000		
	TOTAL	191,360	195,030	184,700	187,790	208,800	211,890		
ASSESSED VALUE	LAND	5,940	7,220	5,530	6,610	5,530	6,610		
	IMPR	61,040	61,040	59,120	59,120	67,550	67,550		
	TOTAL	66,980	68,260	64,650	65,730	73,080	74,160		
CAUV TAX SAVINGS		2016=54.70, 2015=53.16, 2014=53.26: Total=161.12							

OCCUPANCY	EXTERIOR
☐ SNGL FMLY	☐ WOOD
☐ DUPLEX	☐ STUCCO
☐ TRIPLEX	☐ ALM/VYNL
☐ CONVR	☐ CONC BLK
☐ MOBILE HM	☐ METAL
☐ BI/L TRI/L	☐ BRICK
☐ MOD/MAN	☐ STONE

ROOFING	ROOF TYPE
☐ METAL	☐ GABLE
☐ SLT/TLE	☐ HIP
☐ SHINGLES	☐ GAMBREL
☐ SHAKES	☐ MANSARD
☐ COMPOSITE	☐ FLAT

FLOORS	B	1	2	3	U
CONCRETE	☐	☐	☐	☐	☐
WOOD	☐	☐	☐	☐	☐
TILE/COMPO	☐	☐	☐	☐	☐
CARPET	☐	☐	☐	☐	☐

INT. FINISH	B	1	2	3	U
PLASTER/DW	☐	☐	☐	☐	☐
PANELING	☐	☐	☐	☐	☐
UNFINISHED	☐	☐	☐	☐	☐

ACCOMMODATIONS					
# OF ROOMS					
BEDROOMS					
FIREPLACES					

HEAT & AC	B	1	2	3	U
NO HEAT	☐	☐	☐	☐	☐
CTRL HEAT	☐	☐	☐	☐	☐
HW/STEAM	☐	☐	☐	☐	☐
ELECTRIC	☐	☐	☐	☐	☐
HEAT PUMP	☐	☐	☐	☐	☐
FLR/WALL	☐	☐	☐	☐	☐
STVE/SPCE	☐	☐	☐	☐	☐
GEOTHERMAL	☐	☐	☐	☐	☐
OUTSIDE	☐	☐	☐	☐	☐
CTRL A/C	☐	☐	☐	☐	☐

PLUMBING	BASE ☐				
X FULL BATH					
X HALF BATH					
X FIXTURES					

FLOOR	AREA	CONST	VALUE

SUBTOTAL		0
MULTI-FAMILY #	0	0
BSMT FINISH	0 S.F.	0
FIREPLACE #	0	0
HEATING	0 S.F.	0
AIR COND	0 S.F.	0
PLUMBING #	0	0
GARAGES & CARPORTS		0
EXTRA FEATURES		0
SUBTOTAL		0
GRADE FACTOR		%
UNADJUSTED VALUE		0
FACTOR		%

SKETCH

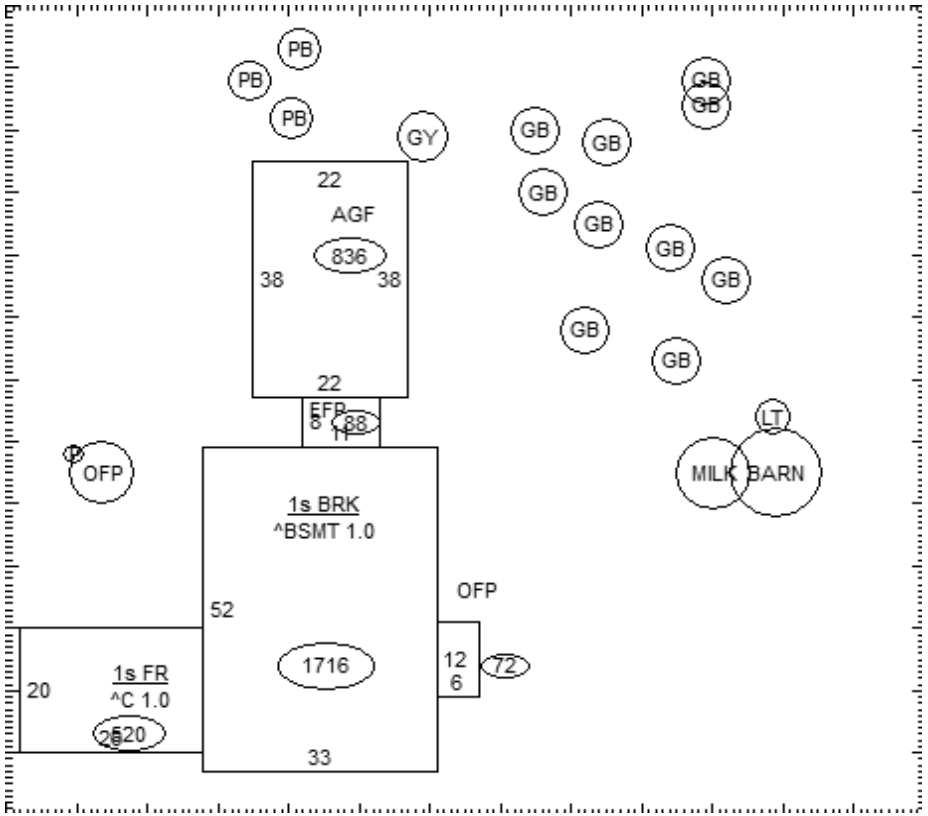

OCCUPANCY	ST.HT	SIZE	AREA	GRADE	PRICE	AGE	REMD	CND	UNADJ VAL	PHYS	PHYS VAL	FUNC	TRUE VAL
DWELLING		SK											
1 Grain Bin	18	18x18	324	C		1975		A		77			0
2 Grain Bin	24	23x24	552	C		2004		A		21			0
3 Grain Bin	24	21x24	504	C		1968		A		80			0
4 Grain Bin	24	23x24	552	C		2006		A		17			0
5 Patio		8x16	128	C	2.70	2010		A	350	9	320		300
6 OFP		16x18	288	C	14.58	2010		A	4,200	9	3,800		3,800
7 Grain Bin	17	17x27	459	C		2010		A		9			0
8 Grain Bin	17	17x27	459	C		2010		A		9			0
9													
10													
11													
											TOTAL		4,100

06-022000.0100

COMMENTS