05-104600.0000

BUTLER TWP-COLDWATER CORP / COLDWATER SD
08-28-427-020

PROP. CLASS		
5	1	0

NEIGHBORHOOD	
000506-TS50	
M	14B8
B	
C	35

AHRENS DUSTIN W
AHRENS DUSTIN W
600 MILL ST
COLDWATER, OH 45828

LEGAL INFORMATION
SELHORST THIRD ADDITION

LOT#: 658

	OWNERSHIP	ADDRESS	CITY	STATE	ZIP	DATE	AMOUNT	DEED:CONV#	JS	VALID
1	AHRENS DUSTIN W	600 MILL ST	COLDWATER	OH	45828	04/01/2009	99,000	WDC : A : 165	☐	■
2	MUELLER VIOLA A	403 PARK ST	COLDWATER	OH	45828	07/18/1989	0	: X : 0	☐	☐
3							0	0	☐	☐

X: | LISTER: NS | DATE: 01/20/2005 | TIME: 12:00:00 AM | ☐ LETTER | ■ LETTER REC'D | GIS CODE

STREET/ROAD	TOPOGRAPHY	PU-UTILITIES-PR		NEIGHBORHOOD	INFLUENCE FACTORS	
■ PAVED	■ LEVEL	☐ WATER	☐	☐ IMPROVING	☐ A. NO ROAD	☐ F. RESTRICT
☐ GRAVEL	☐ HIGH	☐ SEWER	☐	■ STATIC	☐ B. TOPGRHY	☐ G. WOOD LT
☐ DIRT	☐ LOW	☐ GAS	☐	☐ DECLINING	■ C. Ex Front	☐ H. VACANCY
■ SIDEWALKS	☐ ROLLING	☐ ELECTRIC	☐	☐ OLD	☐ D. QUANTITY	☐ I. WATER FRONT
☐ CURBS	☐ STANDARD	■ STANDARD		☐ STANDARD	☐ E. SZ/SHAPE	☐ J. OTHER/CDU

PROPERTY LOCATION
600 N MILL ST, COLDWATER

COMMENT
TY2016:Net Gen=$1,624.94, Other Assessment=$0.00

LAND COMPUTATIONS

LAND TYPE	SIZE	M RATE C	INF	M VALUE C
F:Front	F141 D78	ST260 DP72 ADJ187	C:0.07	24,600 0
			TOTAL	24,600 0

VALUATION SUMMARY

VALUE YEAR		2017	2014	2011					
REASON FOR CHANGE		RAPP	RAPP	RAPP					
APPRAISED VALUE	LAND	24,600	26,300	24,600					
	IMPR	112,600	99,700	93,200					
	TOTAL	137,200	126,000	117,800					
ASSESSED VALUE	LAND	8,610	9,210	8,610					
	IMPR	39,410	34,900	32,620					
	TOTAL	48,020	44,110	41,230					

OCCUPANCY	EXTERIOR
■ SNGL FMLY	■ WOOD
☐ DUPLEX	☐ STUCCO
☐ TRIPLEX	☐ ALM/VYNL
☐ CONVR	☐ CONC BLK
☐ MOBILE HM	☐ METAL
☐ BI/L TRI/L	☐ BRICK
☐ MOD/MAN	☐ STONE

ROOFING	ROOF TYPE
☐ METAL	☐ GABLE
☐ SLT/TLE	■ HIP
■ SHINGLES	☐ GAMBREL
☐ SHAKES	☐ MANSARD
☐ COMPOSITE	☐ FLAT

FLOORS	B	1	2	3	U
CONCRETE	■	☐	☐	☐	☐
WOOD	☐	■	☐	☐	☐
TILE/COMPO	■	☐	☐	☐	☐
CARPET	☐	☐	☐	☐	☐

INT. FINISH	B	1	2	3	U
PLASTER/DW	☐	■	☐	☐	☐
PANELING	☐	☐	☐	☐	☐
UNFINISHED	☐	☐	☐	☐	☐

ACCOMMODATIONS					
# OF ROOMS		6			
BEDROOMS		3			
FIREPLACES		1			

HEAT & AC	B	1	2	3	U
NO HEAT	☐	☐	☐	☐	☐
CTRL HEAT	■	■	☐	☐	☐
HW/STEAM	☐	☐	☐	☐	☐
ELECTRIC	☐	☐	☐	☐	☐
HEAT PUMP	☐	☐	☐	☐	☐
FLR/WALL	☐	☐	☐	☐	☐
STVE/SPCE	☐	☐	☐	☐	☐
GEOTHERMAL	☐	☐	☐	☐	☐
OUTSIDE	☐	☐	☐	☐	☐
CTRL A/C	☐	☐	☐	☐	☐

PLUMBING					BASE ■
X FULL BATH	1				
X HALF BATH					
X FIXTURES					

FLOOR	AREA	CONST	VALUE
1	1640	FR	122,520
BSMT	820		10,660
SUBTOTAL			133,180
MULTI-FAMILY #	0		0
BSMT FINISH	820 S.F.		10,660
FIREPLACE #	1		4,000
HEATING	0 S.F.		0
AIR COND	0 S.F.		0
PLUMBING #	3		3,300
GARAGES & CARPORTS			4,700
EXTRA FEATURES			2,200
SUBTOTAL			158,040
GRADE FACTOR			105 %
UNADJUSTED VALUE			165,940
FACTOR			100 %

SKETCH

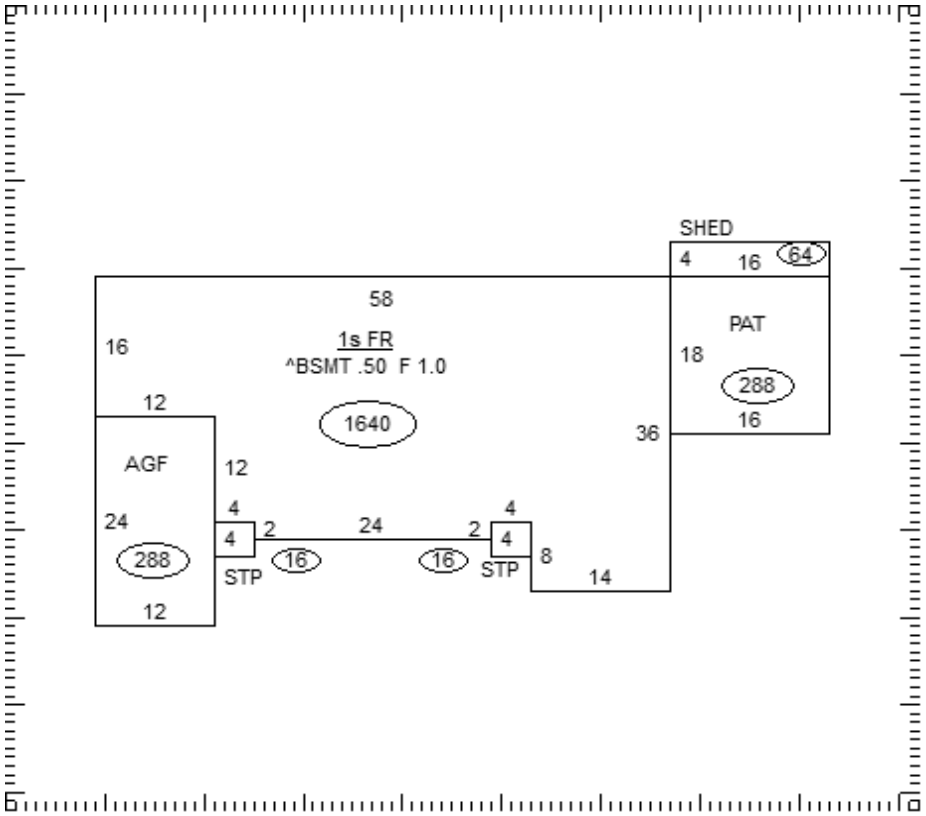

OCCUPANCY	ST.HT	SIZE	AREA	GRADE	PRICE	AGE	REMD	CND	UNADJ VAL	PHYS	PHYS VAL	FUNC	TRUE VAL
DWELLING	1	SK	1,640	C+		1953		A	165,940	42	96,250		112,600
1													
2													
3													
4													
5													
6													
7													
8													
9													
10													
11													
											TOTAL		112,600

05-104600.0000

COMMENTS

Dwelling has an Economic Factor of 117%